A LEADING PoE SOLUTION FOR IP SURVEILLANCE

PRODUCT GUIDE

www.aetektec.com

2021 Ver.1

contents

Long Range PoE & Ethernet Product Guide

P2-9

- Smart EPoC (Ethernet & Power over Coax)
- EPoC (Ethernet & Power over Coax)
- EPoT (Ethernet & Power over UTP/STP)
- EPo2 (Ethernet & Power over 2 Wires)
- PoE Extender

PoE Product Guide

P11-22

- Outdoor PoE Switch
- PoE Switch
- PoE Injector
- PoE Extender
- PoE Media Converter
- PoE Surge Protector

Camera Housing Product Guide

P24-33

- AI Camera Housing
- AC24V (Optional DC24V)
- 30W/60W/90W PoE
- 800m PoE
- AISI 316L Stainless Steel

Long Range PoE & Ethernet Product Guide

Smart EPoC (Ethernet & Power over Coax)
Ethernet & Power over Coax
Ethernet & Power over UTP/STP
Ethernet & Power over 2 Wires
PoE Extender

Long Range PoE & Ethernet Product Selection Guide

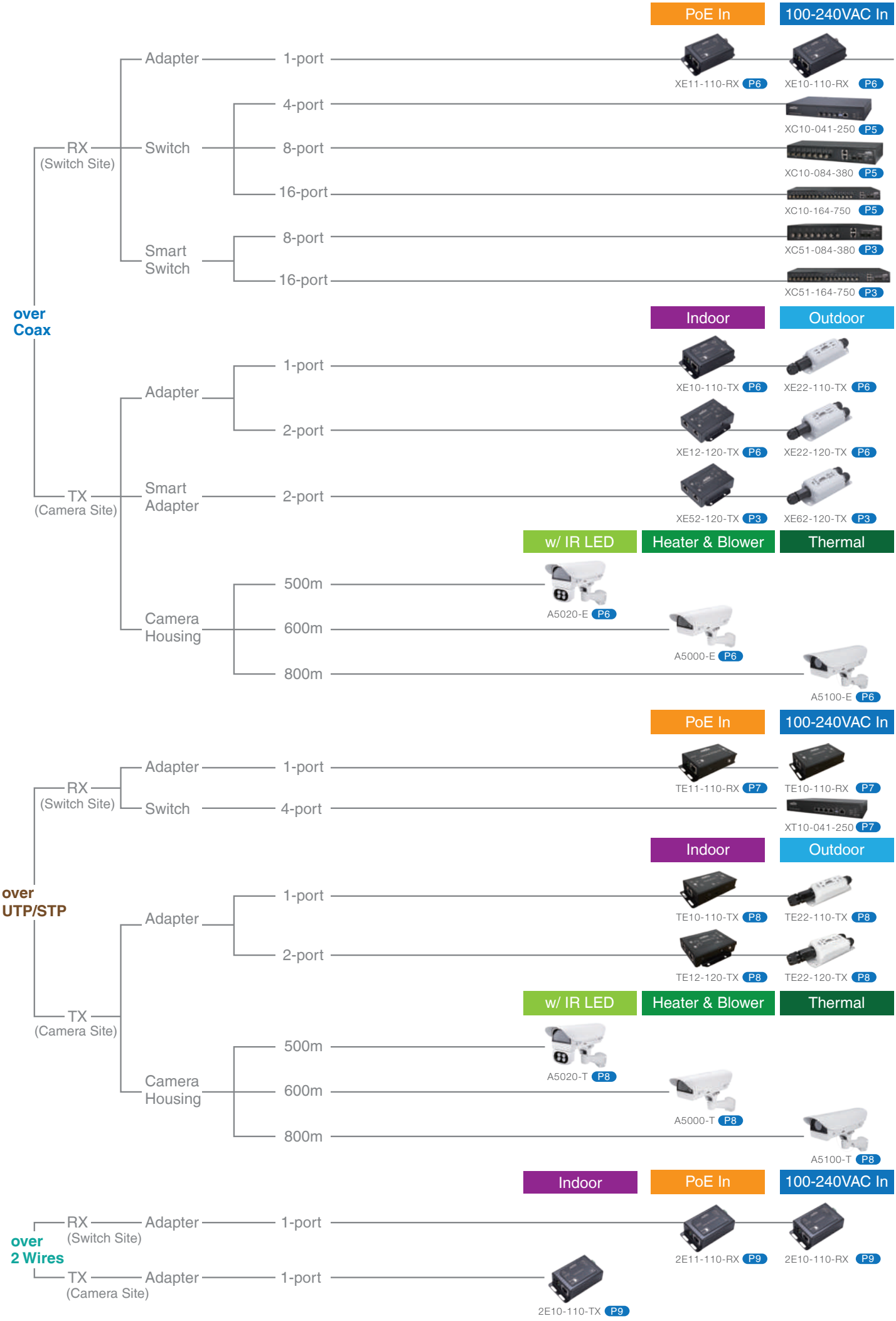

Smart EPoC (Ethernet & Power over Coax) Product Guide

Smart EPoC (Ethernet & Power over Coax) Topology

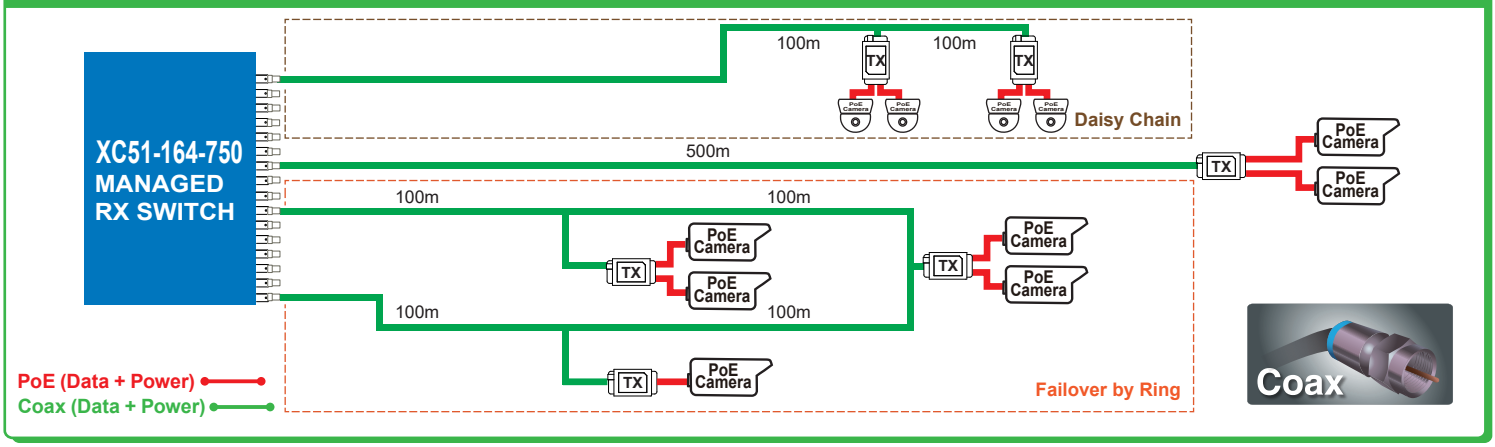

Smart EoC (Ethernet over Coax) Topology

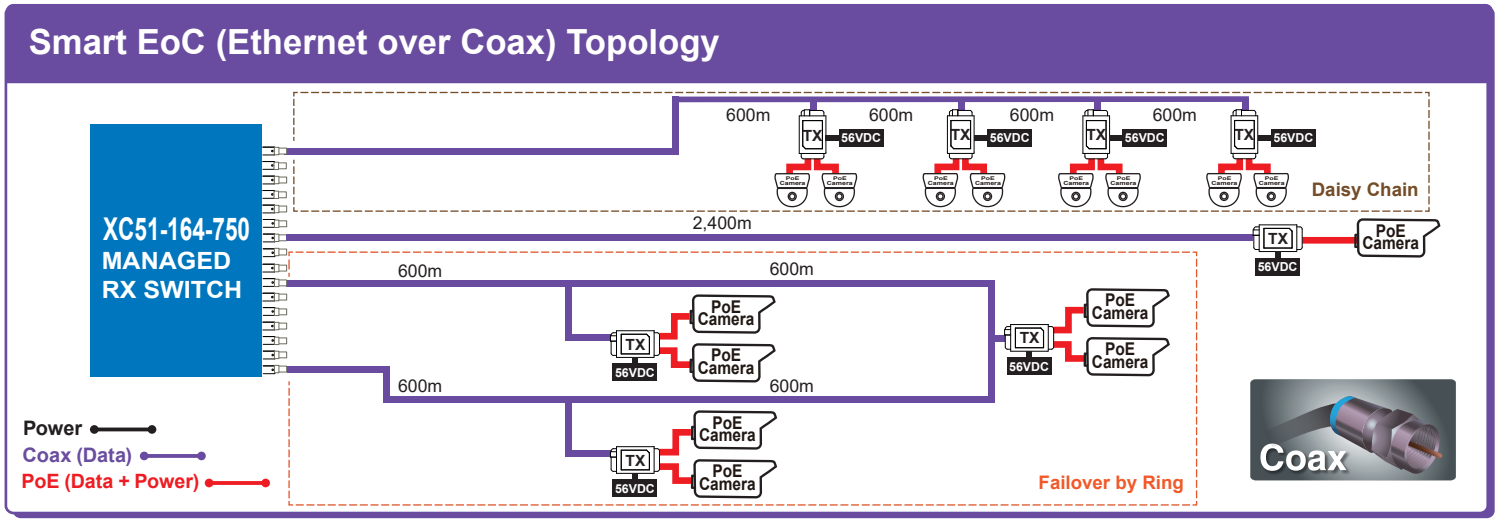

EPoC Managed RX Switch

XC51-084-380

Features

- Web UI Control
- **8xBNC coaxial ports, 2xGbE RJ45 & 2xGbE SFP LAN ports**
- 370W power budget for 8 EPoC ports
- 6KV surge protection for each EPoC port
- Supports 1-to-1, 1-to-multi, Daisy-chain, Ring Topologies

XC51-164-750

Features

- Web UI Control
- **16xBNC coaxial ports, 2xGbE RJ45 & 2xGbE SFP LAN ports**
- 740W power budget for 16 EPoC ports
- 6KV surge protection for each EPoC port
- Supports 1-to-1, 1-to-multi, Daisy-chain, Ring Topologies

EPoC IPTX Adapter

XE52-120-TX

Features

- Web UI Control
- **One BNC coax port & two PoE LAN ports**
- Without requiring extra power adapter beside remote PoE IP cameras
- Delivers up to 25 watts@500m(1,640ft) shared between two PoE IP cameras
- PoE Output On/Off control
- Re-uses existing coax for 2 of PoE IP cameras

XE62-120-TX

Features

- **Outdoor IP67, IK10, -30°C~60°C**
- **Built-in 6KV EPoC surge protection**
- Web UI Control
- One BNC coaxial port & two PoE LAN ports
- PoE Output On/Off control
- Re-uses existing coax for 2 of PoE IP cameras

EPoC Power - Distance Chart

EPoT Power - Distance Chart

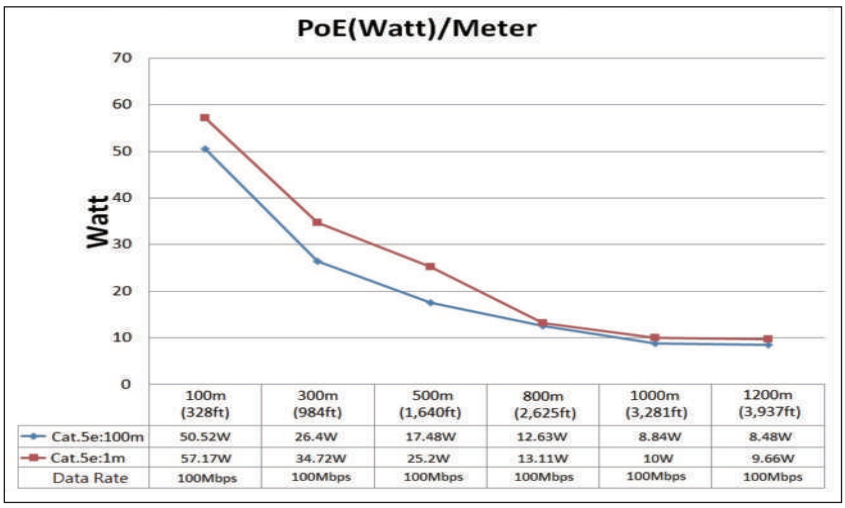

	100m (328ft)	300m (984ft)	500m (1,640ft)	800m (2,625ft)	1000m (3,281ft)	1200m (3,937ft)
Cat.5e:100m	50.52W	26.4W	17.48W	12.63W	8.84W	8.48W
Cat.5e:1m	57.17W	34.72W	25.2W	13.11W	10W	9.66W
Data Rate	100Mbps	100Mbps	100Mbps	100Mbps	100Mbps	100Mbps

EPoC Managed RX Switch

EPoC Output Power Control

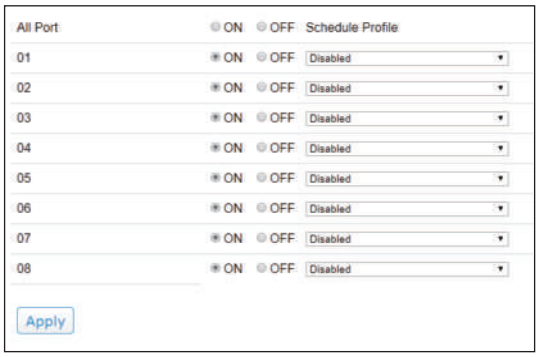

EPoC Output Power Status

Port	Status	Voltage (V)	Current (A)	Watt (W)
01	Enable	54.70	0.00	0.00
02	Enable	54.70	0.06	3.27
03	Enable	54.70	0.00	0.00
04	Enable	54.70	0.00	0.00
05	Enable	54.70	0.00	0.00
06	Enable	54.70	0.03	1.41
07	Enable	54.70	0.00	0.00
08	Enable	54.70	0.00	0.00
Total				4.86

EPoC IPTX Adapter

IPTX PoE Output Control

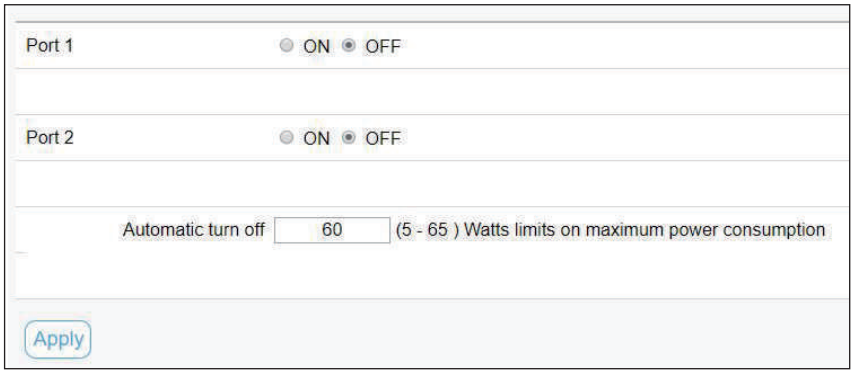

IPTX PoE Output Status

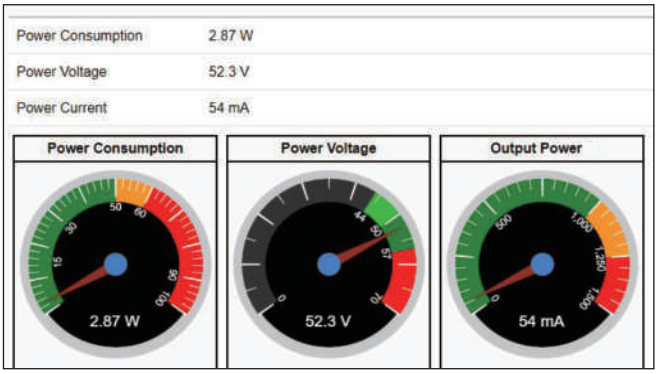

Application

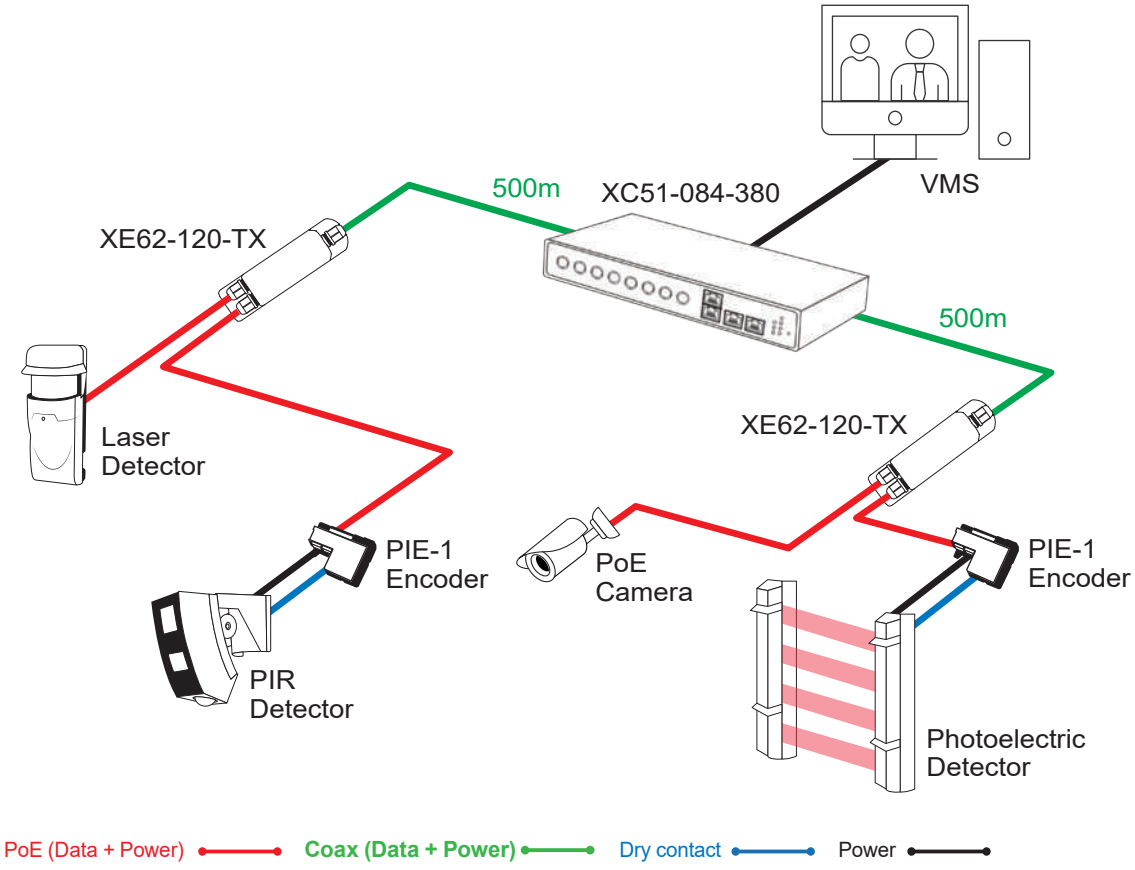

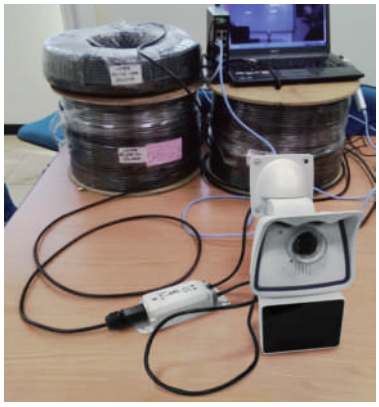

EPoC (Ethernet & Power over Coax) Topology

A: 1 - to - 1

PoE (Data + Power)
Coax (Data + Power)

PoE Budget : 9.7W@1,200m / 3,937ft over RG6
Data Rate : 100Mbps

B: 1 - to - Multi

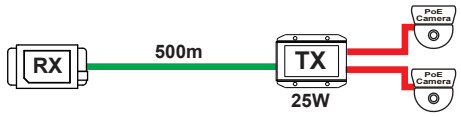

PoE (Data + Power)
Coax (Data + Power)

PoE Budget : 25W@500m / 1,640ft over RG6
Data Rate : 100Mbps

C: Daisy - Chain

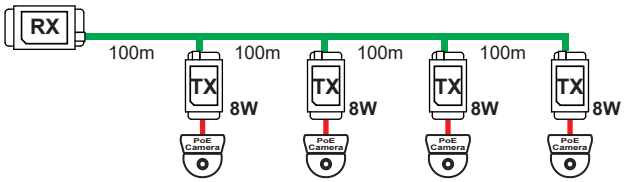

PoE (Data + Power)
Coax (Data + Power)

PoE Budget : 8W@400m / 1,312ft over RG6
Data Rate : 100Mbps

D: Ring (Failover)

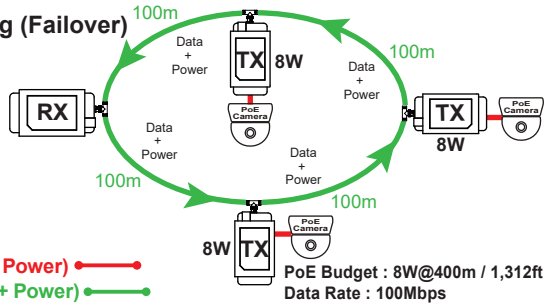

PoE (Data + Power)
Coax (Data + Power)

PoE Budget : 8W@400m / 1,312ft over RG6
Data Rate : 100Mbps

EoC (Ethernet over Coax) Topology

E: 1 - to - 1

Power
Coax (Data)
PoE (Data + Power)

Range : 2,400m / 7,874ft over RG6
Data Rate : 100Mbps

F: 1 - to - Multi

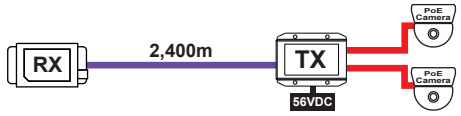

Power
Coax (Data)
PoE (Data + Power)

Range : 2,400m / 7,874ft over RG6
Data Rate : 100Mbps

G: Daisy - Chain

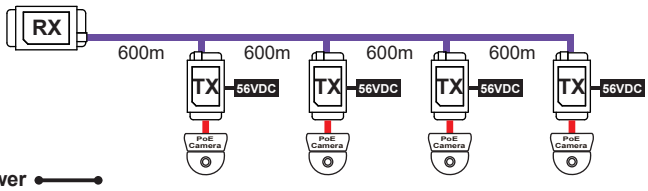

Power
Coax (Data)
PoE (Data + Power)

Range : 2,400m / 7,874ft over RG6
Data Rate : 100Mbps

H: Ring (Failover)

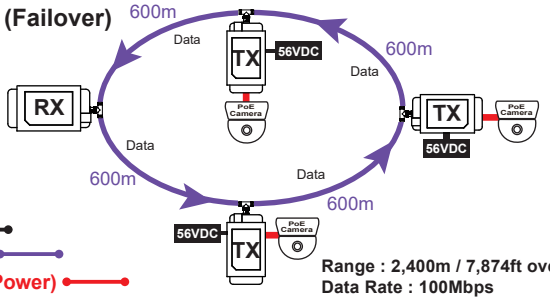

Power
Coax (Data)
PoE (Data + Power)

Range : 2,400m / 7,874ft over RG6
Data Rate : 100Mbps

EPoC RX Switch

XC10-041-250

Features

- 4xBNC coaxial ports, 1xGbE RJ45 LAN port
- 240W power budget for 4 EPoC ports
- 6KV surge protection for EPoC port
- Plug-and-Play deployment PoE IP migration or PoE extension
- Supports 1-to-1, 1-to-multi, Daisy-chain, Ring Topologies

Application

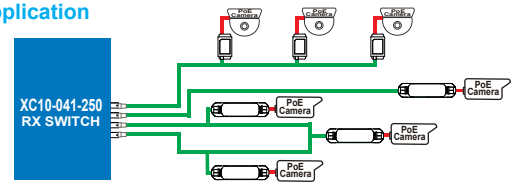

Topology	EPoC	EoC
1-to-1	A:	E:
1-to-Multi	B:	F:
Daisy-Chain	C:	G:
Ring(Failover)	D:	H:

XC10-084-380

Features

- 8xBNC coaxial ports, 2xGbE RJ45 & 2xGbE SFP LAN ports
- 370W power budget for 8 EPoC ports
- 6KV surge protection for EPoC port
- Plug-and-Play deployment PoE IP migration or PoE extension
- Supports 1-to-1, 1-to-multi, Daisy-chain, Ring Topologies

Application

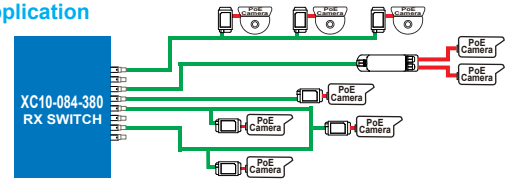

Topology	EPoC	EoC
1-to-1	A:	E:
1-to-Multi	B:	F:
Daisy-Chain	C:	G:
Ring(Failover)	D:	H:

XC10-164-750

Features

- 16xBNC coaxial ports, 2xGbE RJ45 & 2xGbE SFP LAN ports
- 740W power budget for 16 EPoC ports
- 6KV surge protection for EPoC port
- Plug-and-Play deployment PoE IP migration or PoE extension
- Supports 1-to-1, 1-to-multi, Daisy-chain, Ring Topologies

Application

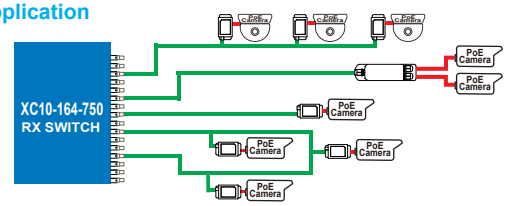

Topology	EPoC	EoC
1-to-1	A:	E:
1-to-Multi	B:	F:
Daisy-Chain	C:	G:
Ring(Failover)	D:	H:

EPoC (Ethernet & Power over Coax) Product Guide

EPoC RX Adapter

XE10-110-RX

Features

- **One BNC coaxial port & one 10/100Mbps LAN port**
- PoE pass through coax to remote PoE IP camera
- Including 65W@ 56VDC power adapter
- Supports 1-to-1, 1-to-multi, Daisy-chain, Ring Topologies

Applications

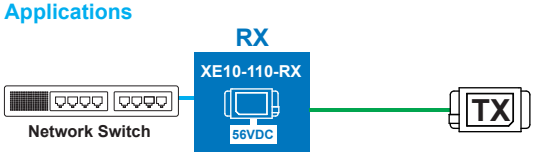

Topology	EPoC	EoC
1-to-1	A: ●	E: ●
1-to-Multi	B: ●	F: ●
Daisy-Chain	C: ●	G: ●
Ring(Failover)	D: ●	H: ●

XE11-110-RX

Features

- **One BNC coaxial port & one 10/100Mbps PoE PD port**
- 30W/60W/90W PoE input
- Without requiring extra power adapter
- PoE pass through coax to remote PoE IP camera
- Supports 1-to-1, 1-to-multi, Daisy-chain, Ring Topologies

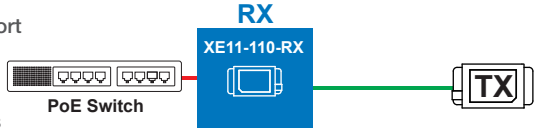

Topology	EPoC	EoC
1-to-1	A: ●	E: ●
1-to-Multi	B: ●	F: ●
Daisy-Chain	C: ●	G: ●
Ring(Failover)	D: ●	H: ●

EPoC TX Adapter

XE10-110-TX

Features

- **One BNC coaxial port & one PoE LAN port**
- **Re-uses existing coax for a PoE IP camera**
- Without requiring extra power adapter beside remote PoE IP camera
- PoE Output On/Off control
- Supports 1-to-1, Daisy-chain, Ring Topologies

Topology	EPoC	EoC
1-to-1	A: ●	E: ●
Daisy-Chain	C: ●	G: ●
Ring(Failover)	D: ●	H: ●

XE12-120-TX

Features

- **One BNC coaxial port & two PoE LAN ports**
- **Re-uses existing coax for 2 of PoE IP cameras**
- Without requiring extra power adapter beside remote PoE IP cameras
- PoE Output On/Off control
- Supports 1-to-multi Topology

Topology	EPoC	EoC
1-to-Multi	B: ●	F: ●

Outdoor EPoC TX Adapter

XE22-110-TX

Features

- **Outdoor IP67, IK10, -30°C~60°C**
- **Built-in 6KV EPoC surge protection**
- **Re-uses existing coax for a PoE IP camera**
- One BNC coaxial port & one PoE LAN port
- PoE Output On/Off control
- Supports 1-to-1, Daisy-chain, Ring Topologies

Applications

Topology	EPoC	EoC
1-to-1	A: ●	E: ●
Daisy-Chain	C: ●	G: ●
Ring(Failover)	D: ●	H: ●

XE22-120-TX

Features

- **Outdoor IP67, IK10, -30°C~60°C**
- **Built-in 6KV EPoC surge protection**
- **Re-uses existing coax for 2 of PoE IP cameras**
- One BNC coaxial port & two PoE LAN ports
- PoE Output On/Off control
- Supports 1-to-multi Topology

Topology	EPoC	EoC
1-to-Multi	B: ●	F: ●

EPoC TX Camera Housing

A5000-E

Features

- **EPoC-TX Camera Housing**
- 20W power budget@600m PoE solution over single coax
- Compatible with IEEE 802.3af/at IP box/brick camera
- Outdoor IP68 / IK10 / 6KV surge protection
- Window heater & blower included
- Supports wide-angle & long-distance remote focus lens

Applications

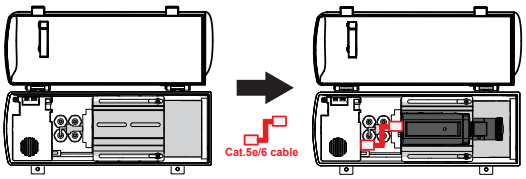

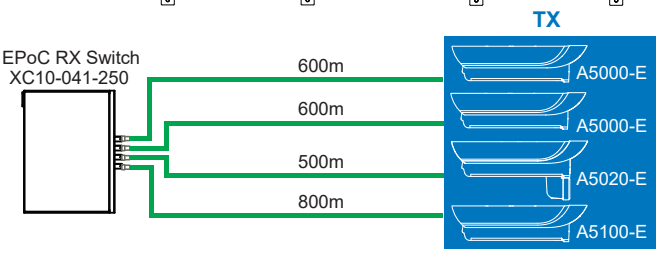

A5020-E

Features

- **EPoC-TX Camera Housing w/IR illuminator(50m)**
- 25W power budget@500m PoE solution over single coax
- Outdoor IP66 / IK10 / 6KV surge protection
- Window heater & blower included
- Supports wide-angle & long-distance remote focus lens

A5100-E

Features

- **EPoC-TX Camera Housing w/germanium window**
- 13W power budget@800m PoE solution over single coax
- Outdoor IP68 / IK10 /6KV surge protection
- Window heater & blower included
- Supports wide-angle & long-distance remote focus lens

EPoC Related Product

CH-100-V2
- 19", 1U 4-bay Rack Mount Chassis
- For 4 sets of XE10-110-RX & 65W power adapter

CH-110-V2
- 19", 1U 8-bay rack mount chassis
- For 8 pieces of XE11-110-RX

SD-301
- BNC Surge Protector
- 6KV Surge Protection

BNC-T
- T-Type BNC Adapter

BNC-YC
- Outdoor Y-Type BNC Cable

BNC-Y
- Y-Type BNC Adapter

EPoT (Ethernet & Power over UTP/STP) Topology

A: 1 - to - 1

PoE (Data + Power)

PoE Budget : 9.7W@1,200m / 3,937ft over Cat6
Data Rate : 100Mbps

B: 1 - to - Multi

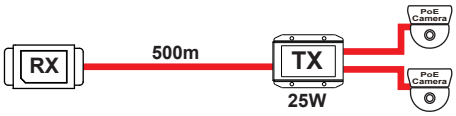

PoE (Data + Power)

PoE Budget : 25W@500m / 1,640ft over Cat6
Data Rate : 100Mbps

C: Daisy - Chain

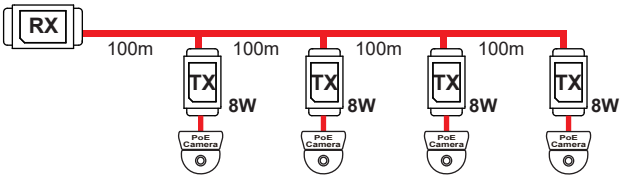

PoE (Data + Power)

PoE Budget : 8W@400m / 1,312ft over Cat6
Data Rate : 100Mbps

D: Ring (Failover)

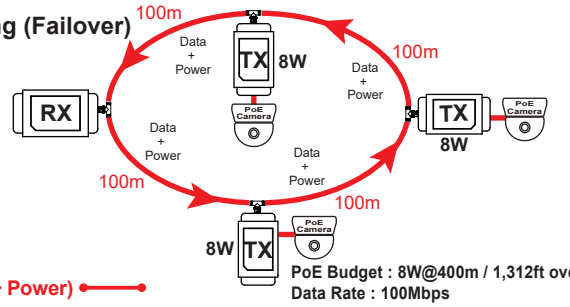

PoE (Data + Power)

PoE Budget : 8W@400m / 1,312ft over Cat6
Data Rate : 100Mbps

EoT (Ethernet over UTP/STP) Topology

E: 1 - to - 1

Power
UTP/STP (Data)
PoE (Data + Power)

Range : 2,400m / 7,874ft over Cat6
Data Rate : 100Mbps

F: 1 - to - Multi

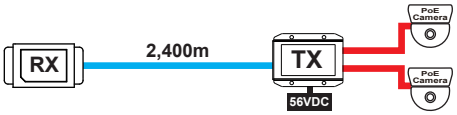

Power
UTP/STP (Data)
PoE (Data + Power)

Range : 2,400m / 7,874ft over Cat6
Data Rate : 100Mbps

G: Daisy - Chain

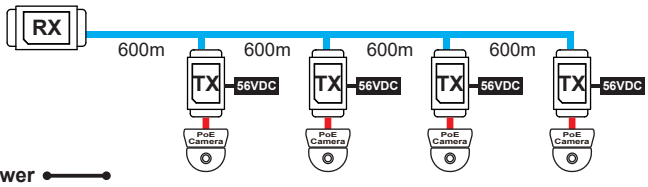

Power
UTP/STP (Data)
PoE (Data + Power)

Range : 2,400m / 7,874ft over Cat6
Data Rate : 100Mbps

H: Ring (Failover)

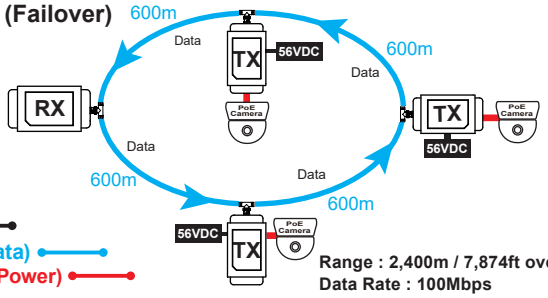

Power
UTP/STP (Data)
PoE (Data + Power)

Range : 2,400m / 7,874ft over Cat6
Data Rate : 100Mbps

EPoT RX Switch

XT10-041-250

Features

- Four EPoT RJ45 ports & one GbE LAN port (RJ45)
- 240W power budget for 4 EPoT ports
- 6KV surge protection for EPoT port
- Plug-and-Play deployment PoE IP migration or PoE extension
- Supports 1-to-1, 1-to-multi, Daisy-chain, Ring Topologies

Application

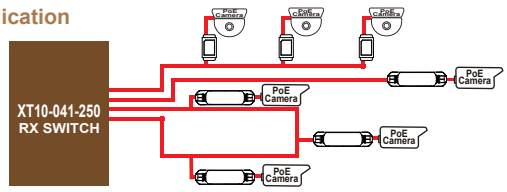

Topology	EPoT	EoT
1-to-1	A:	E:
1-to-Multi	B:	F:
Daisy-Chain	C:	G:
Ring(Failover)	D:	H:

EPoT RX Adapter

TE10-110-RX

Features

- One EPoT RJ45 port & one 10/100Mbps LAN port
- PoE pass through UTP/STP to remote PoE IP camera
- Including 65W@ 56VDC power adapter
- Supports 1-to-1, 1-to-multi, Daisy-chain & Ring Topologies

Application

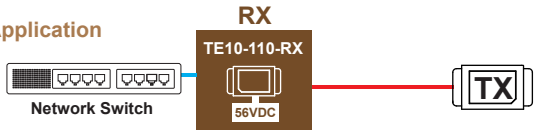

Topology	EPoT	EoT
1-to-1	A:	E:
1-to-Multi	B:	F:
Daisy-Chain	C:	G:
Ring(Failover)	D:	H:

TE11-110-RX

Features

- One EPoT RJ45 port & one 10/100Mbps PoE PD port
- 30W/60W/90W PoE input
- Without requiring extra power adapter
- PoE pass through UTP/STP to remote PoE IP camera
- Supports 1-to-1, 1-to-multi, Daisy-chain, Ring Topologies

Application

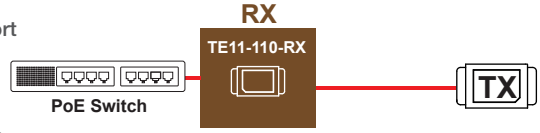

Topology	EPoT	EoT
1-to-1	A:	E:
1-to-Multi	B:	F:
Daisy-Chain	C:	G:
Ring(Failover)	D:	H:

EPoT (Ethernet & Power over UTP/STP) Product Guide

EPoT TX Adapter

TE10-110-TX

Features

- **One EPoT RJ45 port & one PoE LAN port**
- Without requiring extra power adapter beside remote PoE IP camera
- PoE Output On/Off control
- Supports 1-to-1, Daisy-chain, Ring Topologies

Application

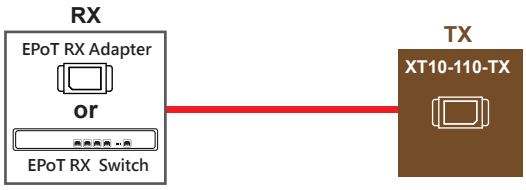

Topology	EPoT	EoT
1-to-1	A: ●	E: ●
Daisy-Chain	C: ●	G: ●
Ring(Failover)	D: ●	H: ●

TE12-120-TX

Features

- **One EPoT RJ45 port & two PoE LAN ports**
- Without requiring extra power adapter beside remote PoE IP cameras
- PoE Output On/Off control
- Supports 1-to-multi Topology

Application

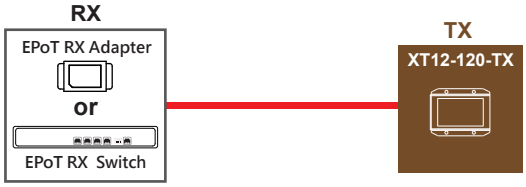

Topology	EPoT	EoT
1-to-Multi	B: ●	F: ●

Outdoor EPoT TX Adapter

TE22-110-TX

Features

- **Outdoor IP67, IK10, -30°C ~ 60°C**
- **Built-in 6KV EPoT surge protection**
- **One EPoT RJ45 port & one PoE LAN port**
- Without requiring extra power adapter beside remote PoE IP camera
- PoE Output On/Off control
- Supports 1-to-1, Daisy-chain, Ring Topologies

Application

Topology	EPoT	EoT
1-to-1	A: ●	E: ●
Daisy-Chain	C: ●	G: ●
Ring(Failover)	D: ●	H: ●

TE22-120-TX

Features

- **Outdoor IP67, IK10, -30°C ~ 60°C**
- **Built-in 6KV EPoT surge protection**
- **One EPoT RJ45 port & two PoE LAN ports**
- Without requiring extra power adapter beside remote PoE IP cameras
- PoE Output On/Off control
- Supports 1-to-multi Topology

Application

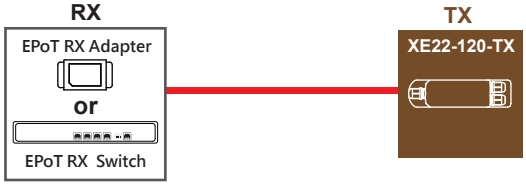

Topology	EPoT	EoT
1-to-Multi	B: ●	F: ●

EPoT TX Camera Housing

A5000-T

Features

- **EPoT-TX Camera Housing**
- 20W power budget@600m PoE solution over single UTP/STP
- Compatible with IEEE 802.3af/at IP box/brick camera
- Outdoor IP68 / IK10 / 6KV surge protection
- Window heater & blower included
- Supports wide-angle & long-distance remote focus lens

A5020-T

Features

- **EPoT-TX Camera Housing w/IR illuminator(50m)**
- 25W power budget@500m PoE solution over single UTP/STP
- Outdoor IP66 / IK10 / 6KV surge protection
- Window heater & blower included
- Supports wide-angle & long-distance remote focus lens

A5100-T

Features

- **EPoT-TX Camera Housing w/germanium window**
- 13W power budget@800m PoE solution over single UTP/STP
- Outdoor IP68 / IK10 /6KV surge protection
- Window heater & blower included
- Supports wide-angle & long-distance remote focus lens

Applications

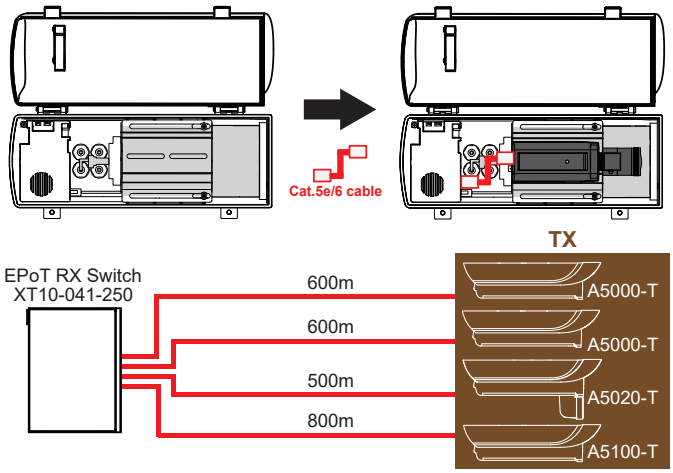

EPoT Related Product

CH-100-V2

- 19", 1U 4-bay rack mount chassis
- For 4 sets of TE10-110-RX & 65W power adapter

CH-110-V2

- 19", 1U 8-bay rack mount chassis
- For 8 pieces of TE11-110-RX

UTP-YC cable

- Outdoor Y type RJ45 Cable

EPo2 (Ethernet & Power over 2 Wires) Topology

EPo2 RX Adapter

2E10-110-RX

Features

- One EPo2 terminal block port & one 10/100Mbps LAN port
- Includes 65W@ 56VDC power adapter
- Uses telephone line, doorbell wire or 1-pair UTP/STP to connect EPo2 TX
- Re-uses in-wall 2 wires infrastructure

2E11-110-RX

Features

- One EPo2 Terminal block port & one 10/100Mbps PoE PD port
- 30W/60W/90W PoE input
- Without requiring extra power adapter
- Uses telephone line, doorbell wire or 1-pair UTP/STP to connect EPo2 TX
- Re-uses in-wall 2 wires infrastructure

EPo2 TX Adapter

2E10-110-TX

Features

- One EPo2 Terminal block port & one 10/100Mbps PoE port
- Without requiring extra power adapter beside remote PoE IP camera
- Uses telephone line, doorbell wire or 1-pair UTP/STP to connect PoE IP devices
- PoE Output On/Off control

Applications

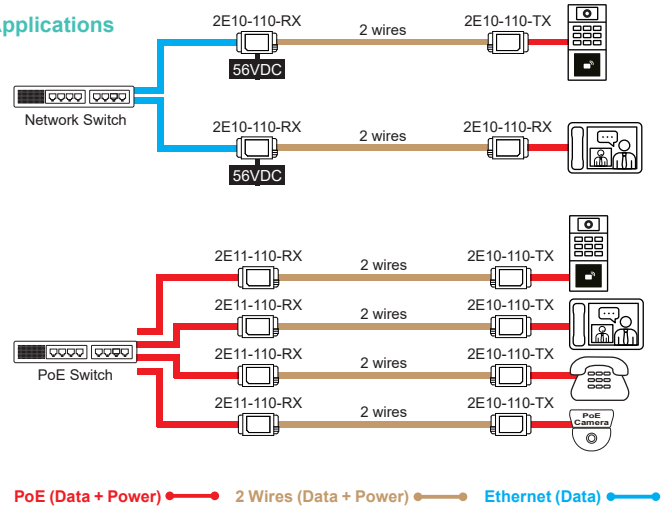

Power / Distance Table : 2 Wires

Power / Distance Table				
	100m	200m	400m	600m
0.4mm Cable 26AWG	Watt : 18W	Watt : 8.06W	X	X
0.5mm Cable 24AWG	Watt : 23.8W	Watt : 12.1W	Watt : 6.1W	X
0.6mm Cable 22AWG	Watt : 32.3W	Watt : 17.2W	Watt : 8.4W	Watt : 5W
Data Rate	100Mbps	100Mbps	100Mbps	100Mbps

EPo2 Related Product

CH-100-V2

- 19", 1U 4-bay rack mount chassis
- For 4 sets of 2E10-11--RX & 65W power adapter

CH-110-V2

- 19", 1U 8-bay rack mount chassis
- For 8 pieces of 2E11-110-RX

PoE Extender Topology

Indoor/Outdoor Gigabit 90W PoE Extender

E59-101

E69-101

Features

- 1-port Gigabit **30W/60W/90W PoE input** + 1-port Gigabit PoE output
- Drives the reach beyond restricted 100m Ethernet distance

E59-102

E69-102

Features

- 1-port Gigabit **30W/60W/90W PoE input** + 2-port Gigabit PoE output
- Drives the reach beyond restricted 100m Ethernet distance

Application

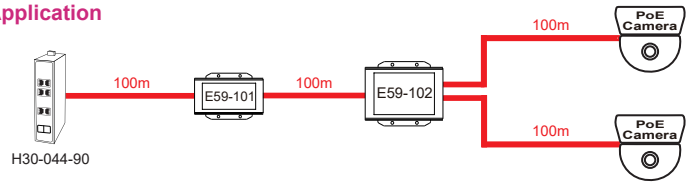

Application

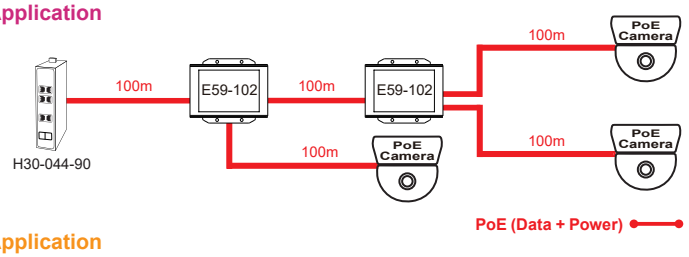

Indoor/Outdoor Gigabit 90W PoE Extender Plus

E59-602

E69-602

Features

- Voltage Booster
- 1-port Gigabit **30W/60W/90W PoE input** + 1-port Gigabit PoE (56VDC) output + 1-port Gigabit **PoE (24VDC/56VDC) output**
- Drives the reach beyond restricted 100m Ethernet distance

Application

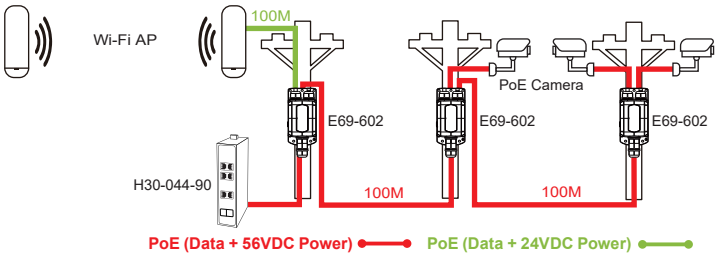

PoE Product Guide

Outdoor PoE Switch
PoE Switch
PoE Injector
PoE Extender
PoE Media Converter
PoE Surge Protector

Outdoor PoE Switch & PoE Injector Product Selection Guide

24VDC PoE | 30W at PoE | 60W PoH PoE | 90W bt PoE | 95W PoH PoE

Outdoor PoE Switch
IP67 / IK10

- Fast Ethernet
  - Unmanaged
    - 5-port
      - H21-041-30-075 P14
    - 10-port
      - H21-082-30-150 P14
- Gigabit Ethernet
  - Unmanaged
    - 4-port
      - H40-022-91-120 P14
      - H40-022-90-120 P14
    - 6-port
      - H42-042-30-075 P14
    - 8-port
      - H40-044-30-150 P14
      - H40-044-91-250 P14
      - H40-044-90-250 P14
    - 10-port
      - H40-082-30-250 P14
  - Managed
    - 8-port
      - H51-044-30-150 P15
      - H51-044-90-250 P15
      - H80-044-30-150 P15
      - H80-044-60-250 P15
    - 12-port
      - H51-084-30-250 P15
      - H80-084-30-250 P15

60W bt PoE | 60W PoH PoE | 90W bt PoE | 95W PoH PoE

PoE Injector
Gigabit

- Indoor
  - I36-210 P19
  - I36-200 P19
  - I39-210 P19
  - I39-200 P19
- Outdoor
  IP67 / IK10
  - I46-210 P19
  - I46-200 P19
  - I49-210 P19
  - I49-200 P19
- Industrial
  - I69-210 P19
  - I69-200 P19
  - I69-216 P20
  - I69-206 P19

Industrial / Indoor PoE Switch Product Selection Guide

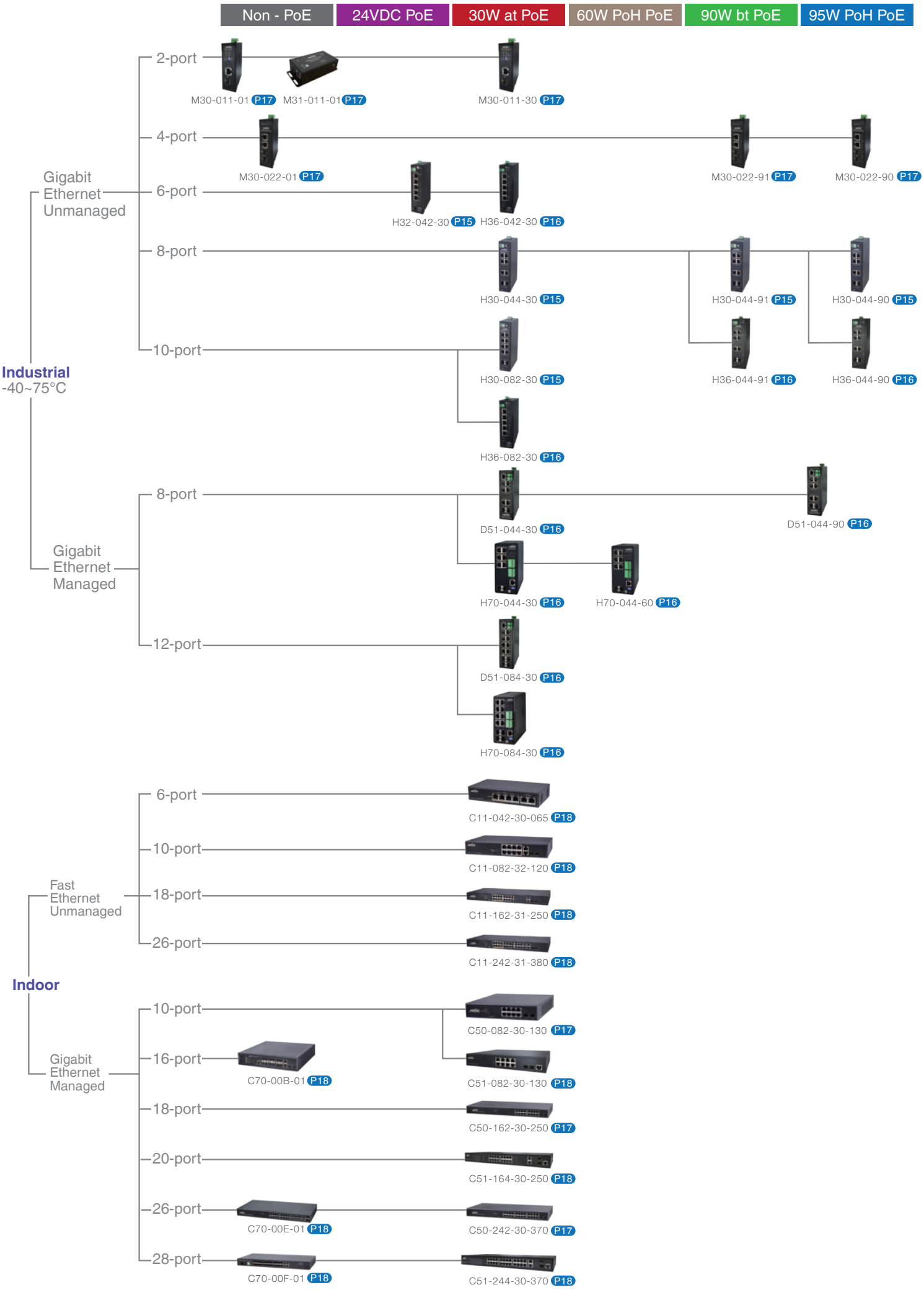

PoE Extender & PoE Surge Protecot Porduct Selection Guide

90W bt PoE | 90W bt PoE w/ Voltage Booster

PoE Extender

- Indoor
  - 1-Port — E59-101 P20
  - 2-Port — E59-102 P20
- Outdoor IP67 / IK10
  - 1-Port — E69-101 P20
  - 2-Port — E69-102 P20

PoE Extender Plus

- Indoor — 2-Port — E59-602 P20
- Outdoor IP67 / IK10 — 2-Port — E69-602 P20

20KV/10KA | 20KV/10KA w/ Modular

PoE Surge Protector 1G / 2.5G bps

- Indoor
  - Unmanaged
    - 1-CH — SD-101 P20
    - 4-CH — SD-404 P21
    - 24-CH — SD-424 P21
  - Managed
    - 4-CH — SD-504 P21
    - 24-CH — SD-524 P21
- Outdoor IP67 / IK10 — Unmanaged — 1-CH — SD-201 P20

Outdoor PoE Switch Product Guide

H21 Series - Outdoor Fast Ethernet EXPoE Switch

H21-041-30-075

Features

- **Outdoor IP67, IK10, -40°C ~ 65°C**
- 4-port 10/100Mbps 30W PoE + 1-port 10/100Mbps
- 12KV PoE surge protection
- **EX mode "on" reaches 802.3af camera up to 250m@10Mbps**

H21-082-30-150

Features

- **Outdoor IP67, IK10, -40°C ~ 65°C**
- 8-port 10/100Mbps 30W PoE + 2-port Gigabit Combo(RJ45/SFP)
- 12KV PoE surge protection
- **EX mode "on" reaches 802.3af camera up to 250m@10Mbps**

Application

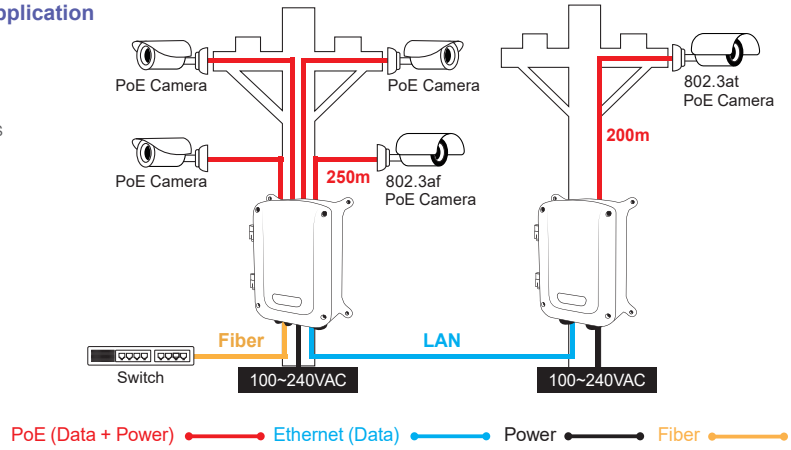

H40 Series - Outdoor Gigabit Ethernet PoE Switch

H40-022-90-120

Features

- **Outdoor IP67, IK10, -40°C~ 65°C**
- **30W/60W/95W PoH PoE output**
- 2-port Gigabit 95W PoH PoE + 2-port Gigabit SFP
- 12KV PoE surge protection

H40-022-91-120

Features

- **Outdoor IP67, IK10, -40°C~ 65°C**
- **30W/60W/90W bt PoE output**
- 2-port Gigabit 90W bt PoE + 2-port Gigabit SFP
- 12KV PoE surge protection

H40-044-30-150

Features

- **Outdoor IP67, IK10, -40°C~ 65°C**
- 4-port Gigabit 30W PoE + 2-port Gigabit RJ45 + 2-port Gigabit SFP
- 12KV PoE surge protection

H40-044-90-250

Features

- **Outdoor IP67, IK10, -40°C~ 65°C**
- **30W/60W/95W PoH PoE output**
- 4-port Gigabit 95W PoH PoE + 2-port Gigabit RJ45 + 2-port Gigabit SFP
- 12KV PoE surge protection

H40-044-91-250

Features

- **Outdoor IP67, IK10, -40°C~ 65°C**
- **30W/60W/90W bt PoE output**
- 4-port Gigabit 90W bt PoE + 2-port Gigabit RJ45 + 2-port Gigabit SFP
- 12KV PoE surge protection

H40-082-30-250

Features

- **Outdoor IP67, IK10, -40°C~ 65°C**
- 8-port Gigabit 30W PoE + 2-port Gigabit SFP
- 12KV PoE surge protection

Application

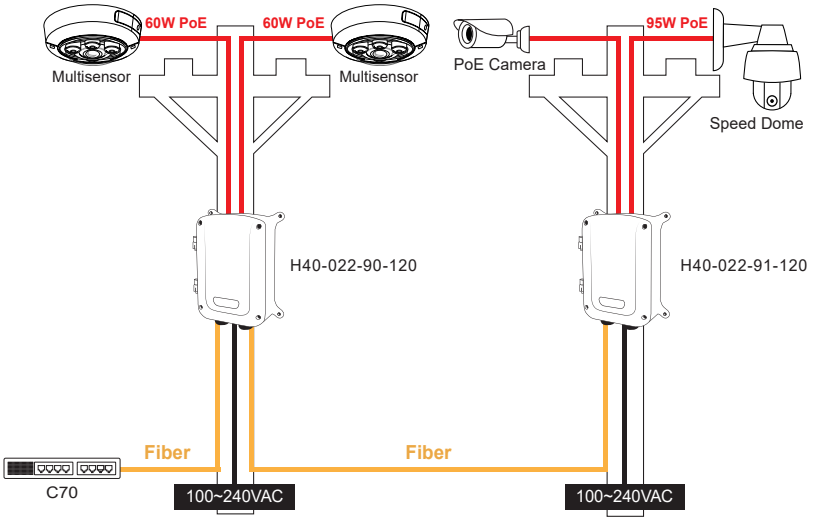

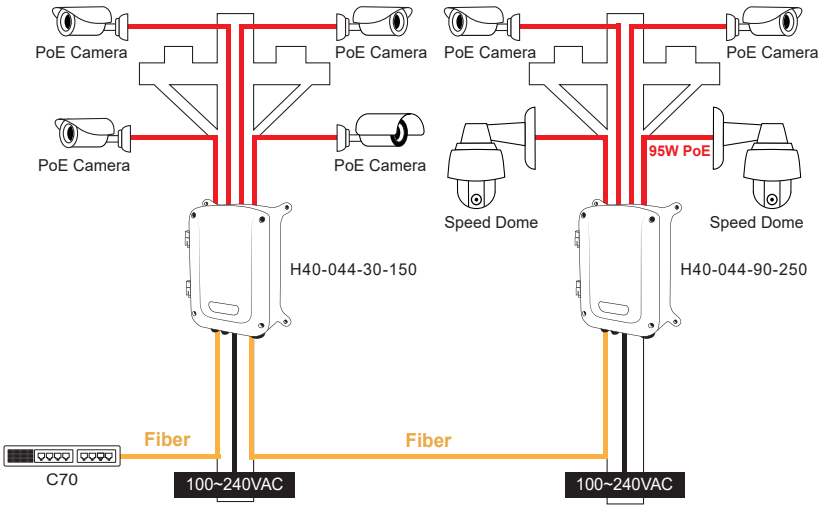

H42 Series - Outdoor Gigabit Ethernet Switch w/ Adjustable PoE Output

H42-042-30-075

Features

- **Outdoor IP67, IK10, -40°C~ 65°C**
- 4-port Gigabit 30W PoE + **1-port Gigabit (24VDC/56VDC) PoE** + 1-port Gigabit SFP
- 6KV PoE surge protection

Application

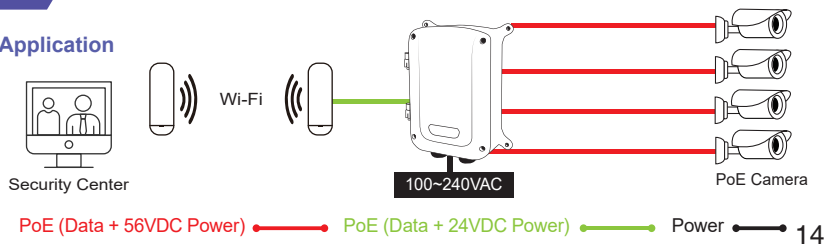

Outdoor PoE Switch & Industrial PoE Switch Product Guide

H51 Series - Outdoor Gigabit Ethernet L2 Smart PoE Switch

H51-044-30-150

Features
- **Outdoor IP67, IK10, -40°C~ 65°C**
- 4-port Gigabit 30W PoE + 2-port Gigabit RJ45 + 2-port Gigabit SFP
- 12KV PoE surge protection

H51-044-90-250

Features
- **Outdoor IP67, IK10, -40°C~ 65°C**
- **4-port Gigabit 90W PoH / bt PoE** + 2-port Gigabit RJ45 + 2-port Gigabit SFP
- 12KV PoE surge protection

H51-084-30-250

Features
- **Outdoor IP67, IK10, -40°C~ 65°C**
- 8-port Gigabit 30W PoE + 4-port Gigabit SFP
- 12KV PoE surge protection

Application

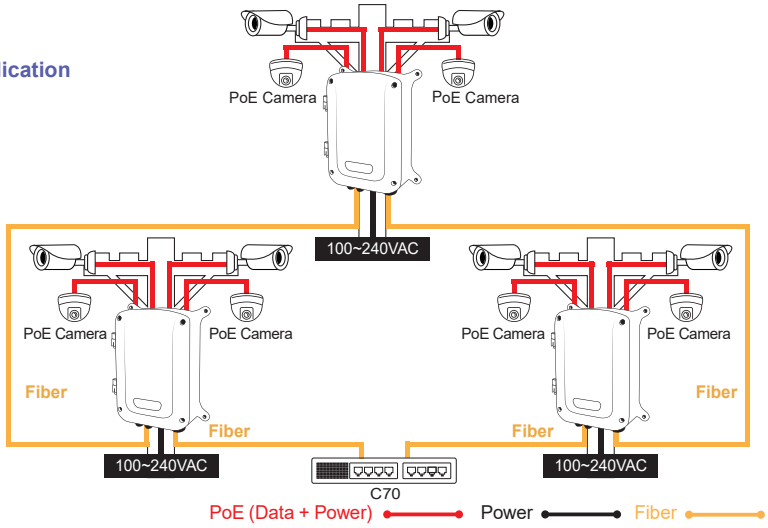

H80 Series - Outdoor L2+ Gigabit Ethernet ONVIF PoE Switch

H80-044-30-150

Features
- **Outdoor IP67, IK10, -40°C~ 65°C**
- 4-port Gigabit 30W PoE + 2-port Gigabit RJ45 + 2-port Gigabit SFP
- L2+, ONVIF Controller
- 6KV PoE surge protection

H80-044-60-250

Features
- **Outdoor IP67, IK10, -40°C~ 65°C**
- **4-port Gigabit 60W PoE** + 2-port Gigabit RJ45 + 2-port Gigabit SFP
- L2+, ONVIF Controller
- 6KV PoE surge protection

H80-084-30-250

Features
- **Outdoor IP67, IK10, -40°C~ 65°C**
- 8-port Gigabit 30W PoE + 4-port Gigabit SFP
- L2+, ONVIF Controller
- 6KV PoE surge protection

Application

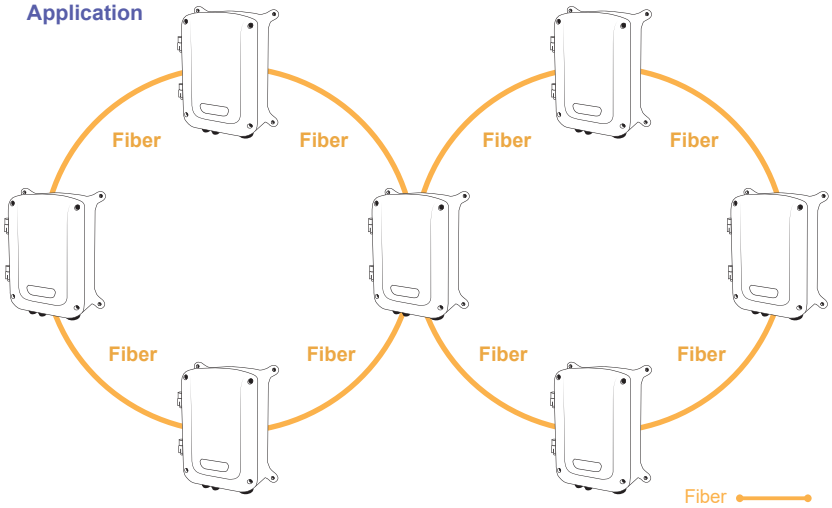

H30 Series - Industrial Gigabit Ethernet PoE Switch

H30-044-30

Features
- 4-port Gigabit 30W PoE + 2-port Gigabit RJ45 + 2-port Gigabit SFP
- 12KV PoE surge protection
- IEEE 802.3at compliant
- -40°C~75°C operating temperature

H30-044-90

Features
- **30W/60W/95W PoH PoE output**
- 4-port Gigabit 95W PoH PoE + 2-port Gigabit RJ45 + 2-port Gigabit SFP
- 12KV PoE surge protection
- -40°C ~ 75°C operating temperature

H30-044-91

Features
- **30W/60W/90W bt PoE output**
- 4-port Gigabit 90W bt PoE + 2-port Gigabit RJ45 + 2-port Gigabit SFP
- 12KV PoE surge protection
- -40°C ~ 75°C operating temperature

H30-082-30

Features
- 8-port Gigabit 30W PoE + 2-port Gigabit SFP
- 12KV PoE surge protection
- IEEE 802.3at compliant
- -40°C~75°C operating temperature

Applications

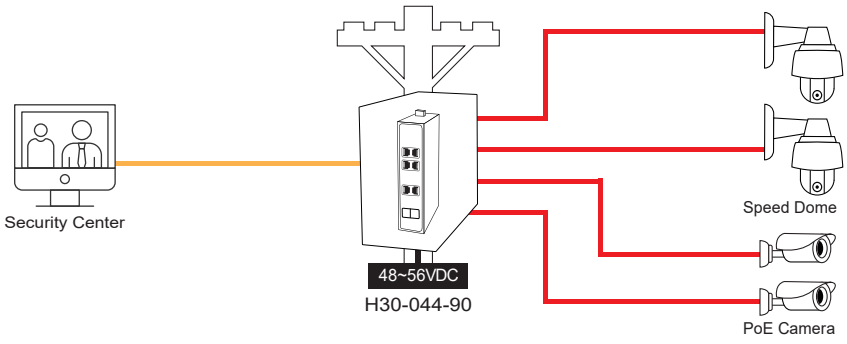

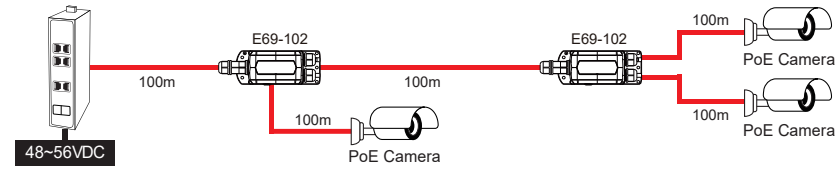

PoE (Data + Power) Power Fiber

H32 Series - Industrial Gigabit Ethernet PoE Switch w/ Adjustable PoE Output

H32-042-30

Features
- 4-port Gigabit 30W PoE + **1-port Gigabit (24VDC/56VDC) PoE** + 1-port Gigabit SFP
- 6KV PoE surge protection
- IEEE 802.3at compliant
- -40°C~75°C operating temperature

Application

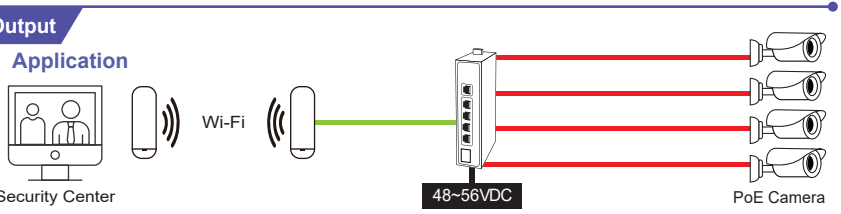

PoE (Data + 56VDC Power) PoE (Data + 24VDC Power) Power

H36 Series - Industrial Gigabit Ethernet PoE Switch w/ 12V~56VDC Input

H36-042-30

Features

- 4-port Gigabit 30W PoE + 1-port Gigabit RJ45 + 1-port Gigabit SFP
- **12V~56VDC Input Power**
- 6KV PoE surge protection
- -40°C~75°C operating temperature

H36-044-90

Features

- **30W/60W/95W PoH PoE output**
- 4-port Gigabit 95W PoH PoE +2-port Gigabit RJ45 + 2-port Gigabit SFP
- **12V~56VDC Input Power**
- 12KV PoE surge protection
- -40°C ~ 75°C operating temperature

H36-044-91

Features

- **30W/60W/90W bt PoE output**
- 4-port Gigabit 90W bt PoE +2-port Gigabit RJ45 + 2-port Gigabit SFP
- **12V~56VDC Input Power**
- 12KV PoE surge protection
- -40°C ~ 75°C operating temperature

H36-082-30

Features

- 8-port Gigabit 30W PoE + 2-port Gigabit SFP
- 12V~56VDC Input Power
- 12KV PoE surge protection
- -40°C ~ 75°C operating temperature

Applications

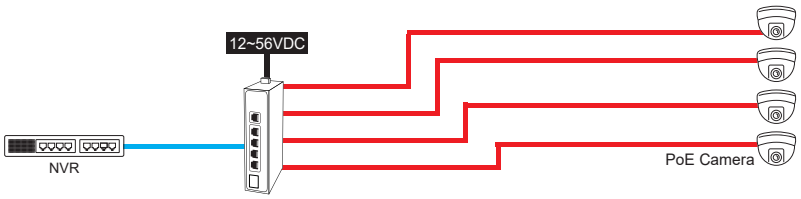

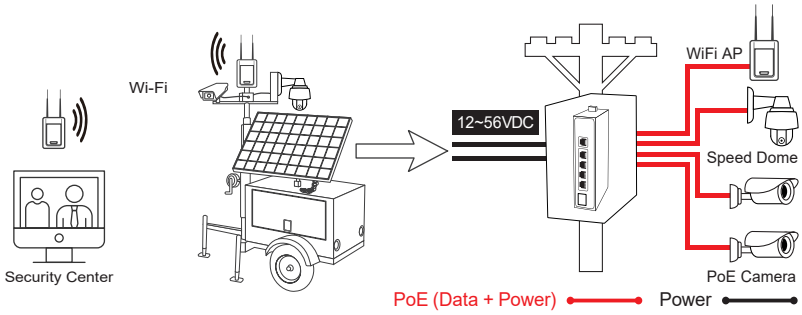

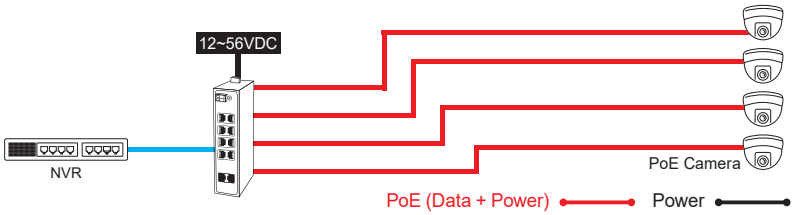

D51 Series - Industrial L2 Gigabit Ethernet PoE Switch

D51-044-30

Features

- 4-port Gigabit 30W PoE + 2-port Gigabit RJ45 + 2-port Gigabit SFP
- 12KV PoE surge protection
- -40°C ~ 75°C operating temperature

D51-044-90

Features

- **4-port Gigabit 90W PoH / bt PoE** + 2-port Gigabit RJ45 + 2-port Gigabit SFP
- 12KV PoE surge protection
- -40°C ~ 75°C operating temperature

D51-084-30

Features

- 8-port Gigabit 30W PoE + 4-port Gigabit SFP
- 12KV PoE surge protection
- -40°C ~ 75°C operating temperature

Application

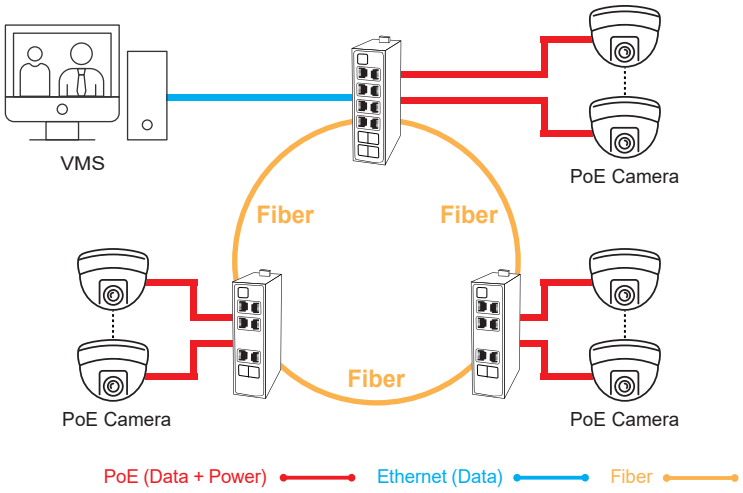

H70 Series - Industrial L2+ Gigabit Ethernet PoE Switch

H70-044-30

Features

- 4-port Gigabit 30W PoE + 2-port Gigabit RJ45 + 2-port Gigabit SFP
- L2+, ONVIF Controller
- 6KV PoE surge protection
- -40°C~75°C operating temperature

H70-044-60

Features

- **4-port Gigabit 60W PoE** + 2-port Gigabit RJ45 + 2-port Gigabit SFP
- L2+, ONVIF Controller
- 6KV PoE surge protection
- -40°C~75°C operating temperature

H70-084-30

Features

- 8-port Gigabit 30W PoE + 4-port Gigabit SFP
- L2+, ONVIF Controller
- 6KV PoE surge protection
- -40°C~75°C operating temperature

Application

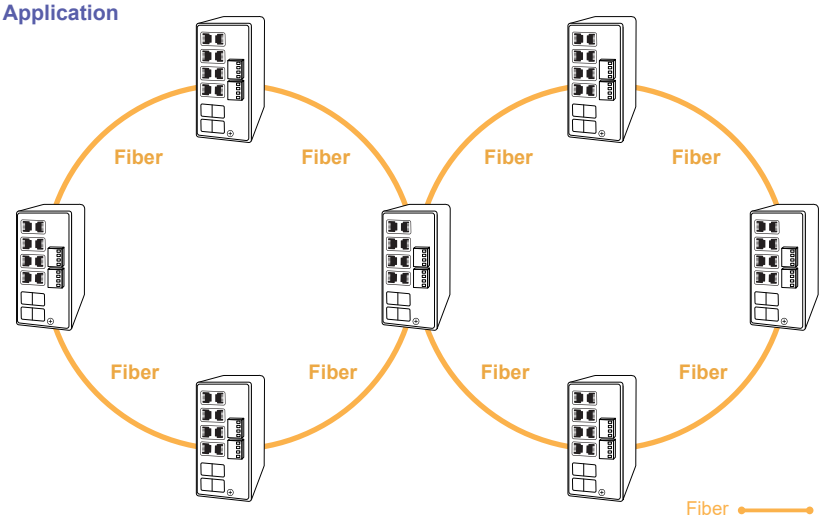

M30 Series - Industrial Gigabit Media Converter

M30-011-01

Features

- 1-port Gigabit RJ45 + 1-port Gigabit SFP
- 12~56VDC or 24VAC Input Power
- Support LFP(Link Fault Passthrough)
- 12KV surge protection
- -40°C ~ 75°C operating temperature

M30-022-01

Features

- 2-port Gigabit RJ45 + 2-port Gigabit SFP
- 12~56VDC Input Power
- 12KV surge protection
- -40°C ~ 75°C operating temperature

Applications

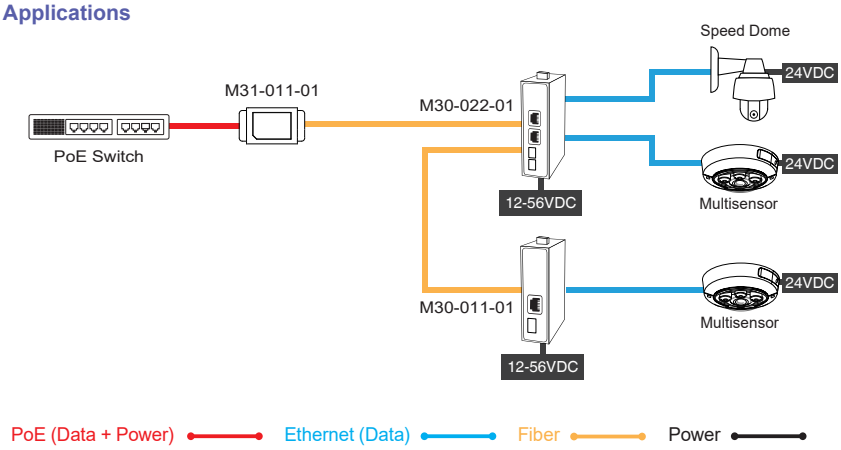

M30 Series - Industrial Gigabit PoE Media Converter

M30-011-30

Features

- 1-port Gigabit 30W PoE + 1-port Gigabit SFP
- 48~56VDC Input Power
- Supports LFP(Link Fault Passthrough)
- 12KV surge protection
- -40°C ~ 75°C operating temperature

M30-022-90

Features

- 2-port Gigabit 95W PoH PoE + 2-port Gigabit SFP
- 48~56VDC Input Power
- 12KV surge protection
- -40°C ~ 75°C operating temperature

M30-022-91

Features

- 2-port Gigabit 90W bt PoE + 2-port Gigabit SFP
- 48~56VDC Input Power
- 12KV surge protection
- -40°C ~ 75°C operating temperature

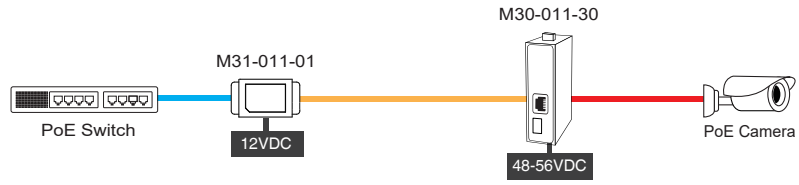

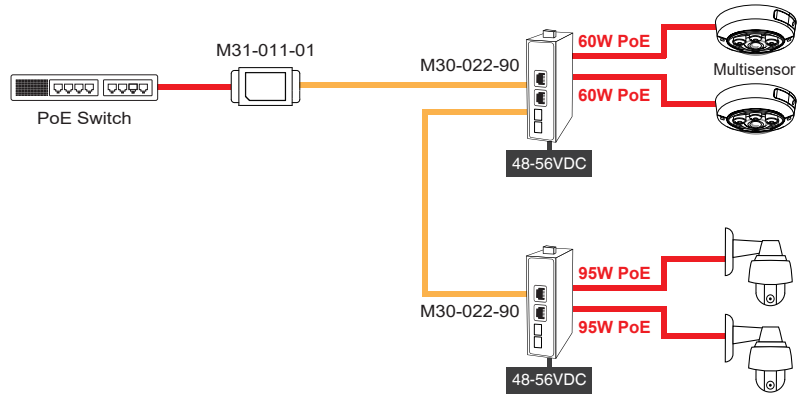

M31 Series - Industrial Gigabit PoE PD Media Converter

M31-011-01

Features

- 1-port Gigabit 30W PoE PD + 1-port Gigabit SFP
- 30W PoE or 12VDC Input Power
- Flexible SFP transceiver port for uplink
- Supporting 10/100/1000Mbps data rates
- -40°C ~ 75°C operating temperature

PoE (Data + Power) Ethernet (Data) Fiber Power

C50 Series - L2 Gigabit Ethernet ONVIF PoE Switch

C50-082-30-130

Features

- 8-port Gigabit 30W PoE + 2-port Gigabit SFP
- L2, ONVIF Controller
- 6KV PoE surge protection
- IEEE 802.3at compliant

C50-162-30-250

Features

- 16-port Gigabit 30W PoE + 2-port Gigabit SFP
- L2, ONVIF Controller
- 6KV PoE surge protection
- IEEE 802.3at compliant

C50-242-30-370

Features

- 24-port Gigabit 30W PoE + 2-port Gigabit SFP
- L2, ONVIF Controller
- 6KV PoE surge protection
- IEEE 802.3at compliant

Topology View

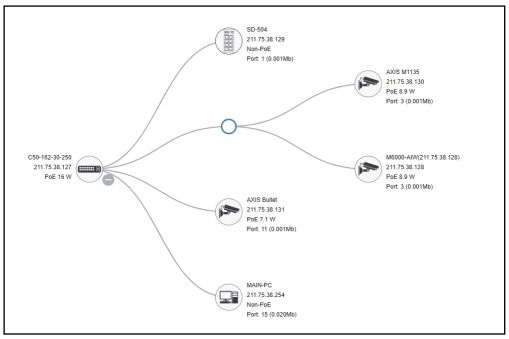

Camera Dashboard

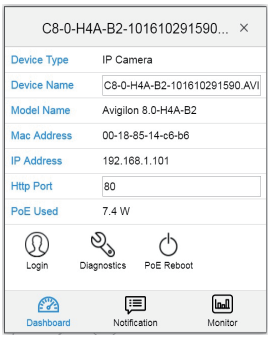

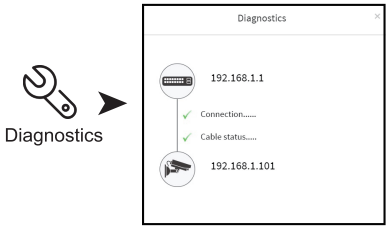

Diagnostics

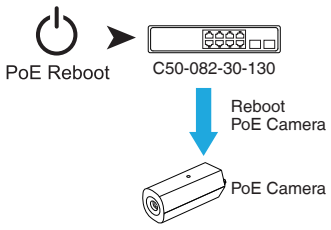

L2 Gigabit Ethernet Smart PoE Switch & EXPoE Switch Product Guide

C51 Series - L2 Gigabit Ethernet Smart PoE Switch

C51-082-30-130

Features
- 8-port Gigabit 30W PoE + 2-port Gigabit SFP
- 12KV PoE surge protection
- IEEE 802.3at compliant

C51-164-30-250

Features
- 16-port Gigabit 30W PoE + 2-port Gigabit SFP
- 12KV PoE surge protection
- IEEE 802.3at compliant

C51-244-30-370

Features
- 24-port Gigabit 30W PoE + 2-port Gigabit SFP
- 12KV PoE surge protection
- IEEE 802.3at compliant

Applications

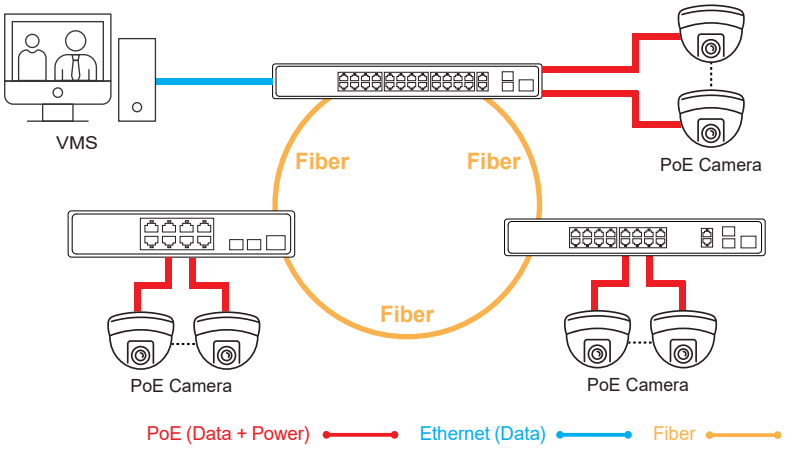

C70 Series - L2+ Gigabit Ethernet ONVIF Switch

C70-00B-01

Features
- 12-port Gigabit SFP + 2-port Gigabit RJ45 + 2-port 1G/10G SFP+
- L2+, ONVIF Controller
- IEEE 802.3az EEE standard for green power

C70-00E-01

Features
- 24-port Gigabit + 2-port Gigabit Combo (RJ45/SFP)
- L2+, ONVIF Controller
- IEEE 802.3az EEE standard for green power

C70-00F-01

Features
- 20-port Gigabit SFP + 4-port Gigabit Combo (RJ45/SFP)+ 4-port 1G/10G SFP+
- L2+, ONVIF Controller
- IEEE 802.3az EEE standard for green power

Topology View

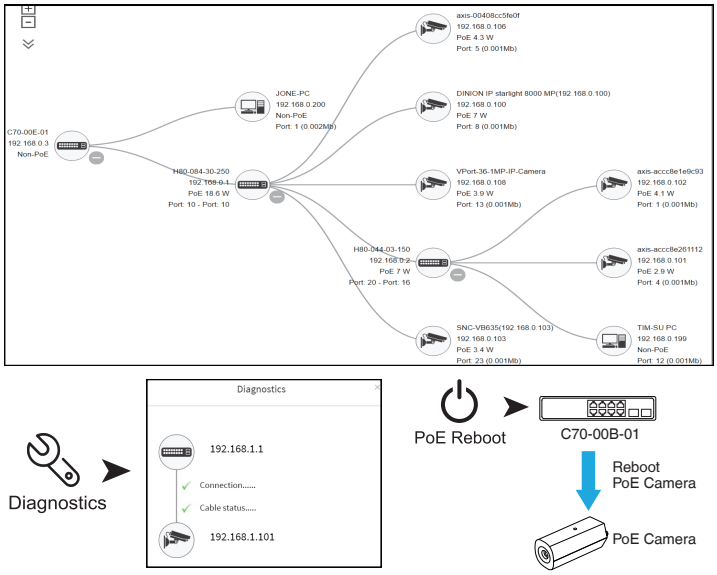

C11 Series - EXPoE Switch

C11-042-30-065

Features
- 4-port 10/100Mbps 30W PoE + 2-port 10/100Mbps
- IEEE 802.3at compliant
- 4KV PoE surge protection
- EX mode "on" reaches 802.3af camera up to 250m@10Mbps

C11-082-32-120

Features
- 8-port 10/100Mbps 30W PoE + 2-port Gigabit Combo (RJ45/SFP)
- IEEE 802.3at compliant
- 6KV PoE surge protection
- EX mode "on" reaches 802.3af camera up to 250m@10Mbps

C11-162-31-250

Features
- 16-port 10/100Mbps 30W PoE + 2-port Gigabit Combo (RJ45/SFP)
- IEEE 802.3at compliant
- 6KV PoE surge protection
- EX mode "on" reaches 802.3af camera up to 250m@10Mbps

C11-242-31-380

Features
- 24-port 10/100Mbps 30W PoE + 2-port Gigabit Combo (RJ45/SFP)
- IEEE 802.3at compliant
- 6KV PoE surge protection
- EX mode "on" reaches 802.3af camera up to 250m@10Mbps

Applications

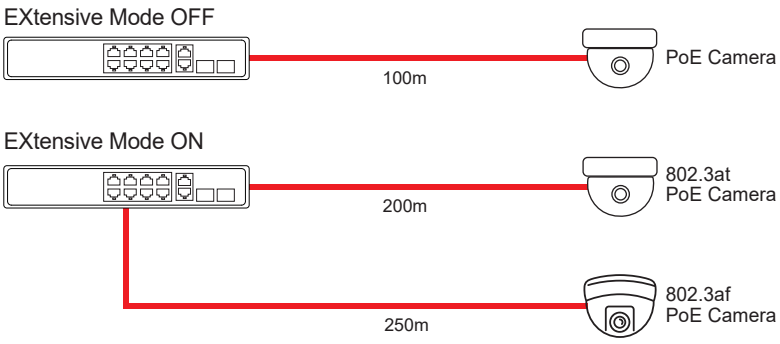

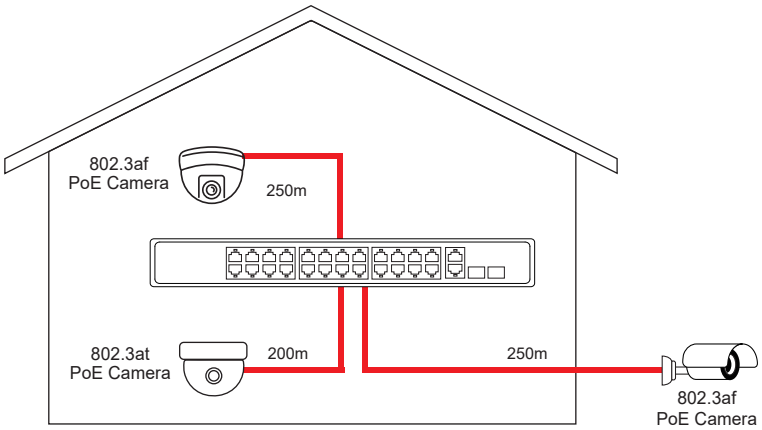

PoE (Data + Power)

Gigabit PoE Injector Product Guide

I36 Series - Indoor Gigabit 60W PoE Injector

I36-200

Features

- Provides **60W PoH PoE** over 4-pairs UTP/STP
- 12KV PoE surge protection
- Supports 10/100/1000Mbps data rates
- IEEE 802.3bt/at/af compliant

I36-210

Features

- Provides **60W bt PoE** over 4-pairs UTP/STP
- 12KV PoE surge protection
- Supports 10/100/1000Mbps data rates
- IEEE 802.3bt/at/af compliant

I39 Series - Indoor Gigabit 90W/95W PoE Injector

I39-200

Features

- Provides **95W PoH PoE** over 4-pairs UTP/STP
- 12KV PoE surge protection
- Supports 10/100/1000Mbps data rates
- IEEE 802.3bt/at/af compliant

I39-210

Features

- Provides **90W bt PoE** over 4-pairs UTP/STP
- 12KV PoE surge protection
- Supports 10/100/1000Mbps data rates
- IEEE 802.3bt/at/af compliant

I46 Series - Outdoor Gigabit 60W PoE Injector

I46-200

Features

- **Outdoor IP67, IK10, -40°C~65°C**
- Provides **60W PoH PoE** over 4-pairs UTP/STP
- 12KV PoE surge protection
- Supports 10/100/1000Mbps data rates

I46-210

Features

- **Outdoor IP67, IK10, -40°C~65°C**
- Provides **60W bt PoE** over 4-pairs UTP/STP
- 12KV PoE surge protection
- Supports 10/100/1000Mbps data rates

I49 Series - Outdoor Gigabit 95W PoE Injector

I49-200

Features

- **Outdoor IP67, IK10, -40°C~65°C**
- Provides **95W PoH PoE** over 4-pairs UTP/STP
- 12KV PoE surge protection
- Supports 10/100/1000Mbps data rates

I49-210

Features

- **Outdoor IP67, IK10, -40°C~65°C**
- Provides **90W bt PoE** over 4-pairs UTP/STP
- 12KV PoE surge protection
- Supports 10/100/1000Mbps data rates

Applications

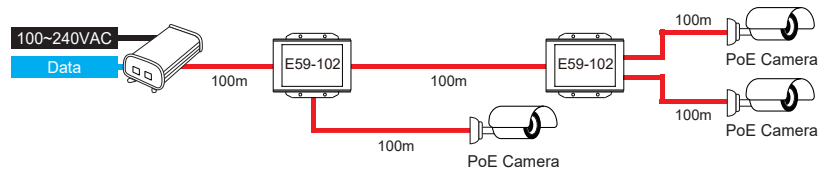

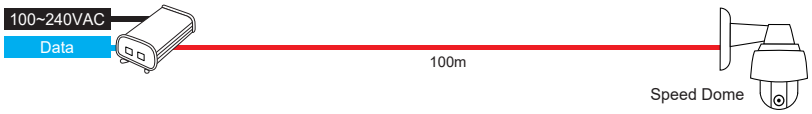

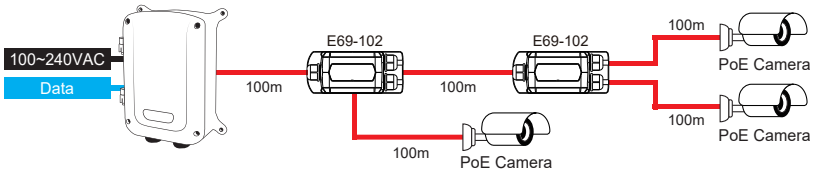

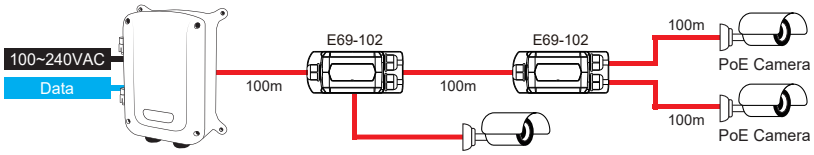

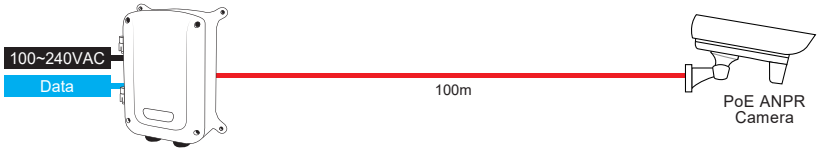

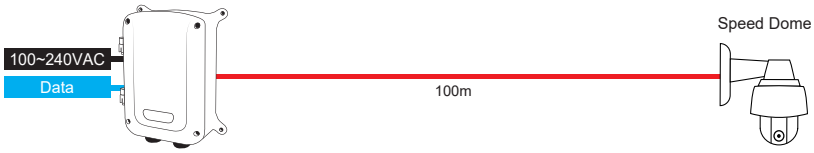

PoE (Data + Power) — Ethernet (Data) — Power

I69 Series - Industrial Gigabit 90W/95W PoE Injector

I69-200

Features

- -40°C~75°C operating temperature
- Provides **95W PoH PoE** over 4-pairs UTP/STP
- 12KV PoE surge protection
- Supports 10/100/1000Mbps data rates

I69-210

Features

- -40°C~75°C operating temperature
- Provides **90W bt PoE** over 4-pairs UTP/STP
- 12KV PoE surge protection
- Supports 10/100/1000Mbps data rates

Applications

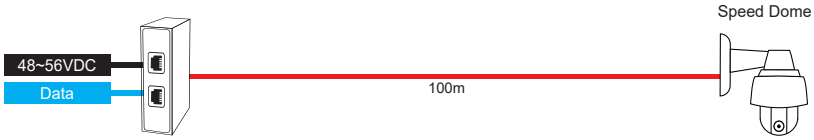

I69 Series - Industrial Gigabit 90W/95W PoE Injector w/ 12~56VDC Input

I69-206

Features

- -40°C ~ 75°C operating temperature
- 12~56VDC Power Input
- Provides **95W PoH PoE** over 4-pairs UTP/STP
- 12KV PoE surge protection
- Supports 10/100/1000Mbps data rates

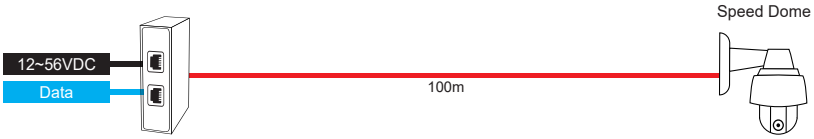

PoE (Data + Power) — Ethernet (Data) — Power

I69 Series - Industrial Gigabit 90W/95W PoE Injector w/ 12~56VDC Input

I69-216

Features

- -40°C ~ 75°C operating temperature
- 12~56VDC Power Input
- Provides **90W bt PoE** over 4-pairs UTP/STP
- 12KV PoE surge protection
- Supports 10/100/1000Mbps data rates

Application

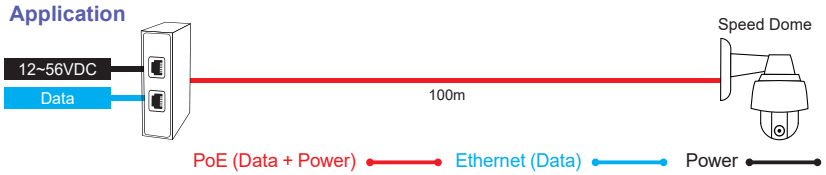

E59 Series - Indoor Gigabit 90W PoE Extender

E59-101

Features

- 1-port Gigabit **30W/60W/90W PoE input** + 1-port Gigabit PoE output
- 12KV Surge protection
- Drives the reach beyond restricted 100m Ethernet distance

Application

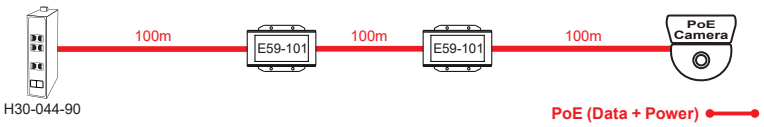

E59-102

Features

- 1-port Gigabit **30W/60W/90W PoE input** + 2-port Gigabit PoE output
- 12KV Surge protection
- Drives the reach beyond restricted 100m Ethernet distance

Application

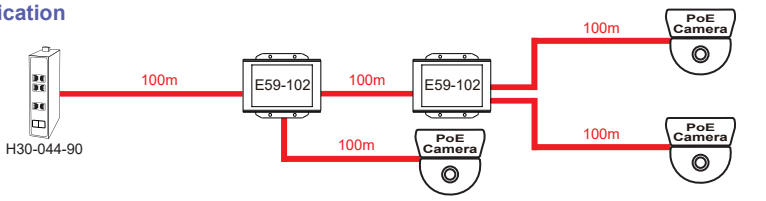

E69 Series - Outdoor Gigabit 90W PoE Extender

E69-101

Features

- **Outdoor IP67, IK10, -40°C~65°C**
- 1-port Gigabit **30W/60W/90W PoE input** + 1-port Gigabit PoE output
- 12KV Surge protection
- Operating temperature: -40°C ~ 65°C
- Drives the reach beyond restricted 100m Ethernet distance

Application

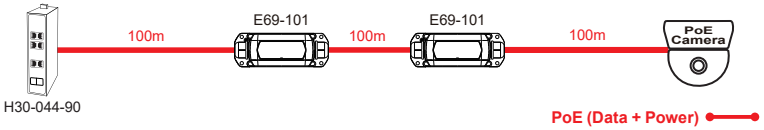

E69-102

Features

- **Outdoor IP67, IK10, -40°C~65°C**
- 1-port Gigabit **30W/60W/90W PoE input** + 2-port Gigabit PoE output
- 12KV Surge protection
- Operating temperature: -40°C ~ 65°C
- Drives the reach beyond restricted 100m Ethernet distance

Application

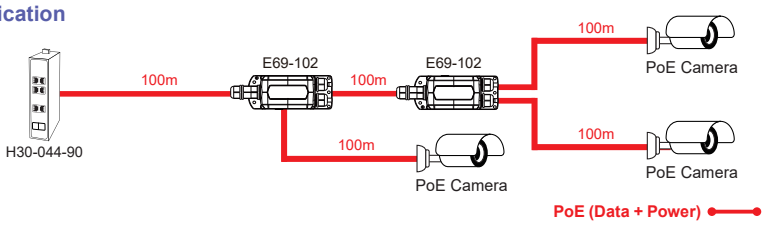

E59 Series - Indoor Gigabit 90W PoE Extender Plus

E59-602

Features

- **Voltage Booster**
- 1-port Gigabit **30W/60W/90W PoE input** + 1-port Gigabit PoE (56VDC) output + 1-port Gigabit **PoE (24VDC/56VDC) output**
- Drives the reach beyond restricted 100m Ethernet distance

Application

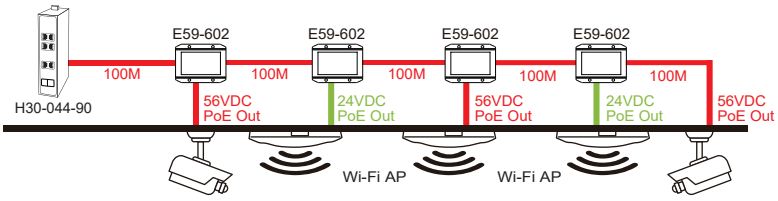

E69 Series - Outdoor Gigabit 90W PoE Extender Plus

E69-602

Features

- **Outdoor IP67, IK10, -40°C~65°C**
- **Voltage Booster**
- 1-port Gigabit **30W/60W/90W PoE input** + 1-port Gigabit PoE (56VDC) output + 1-port Gigabit **PoE (24VDC/56VDC) output**
- Drives the reach beyond restricted 100m Ethernet distance

Application

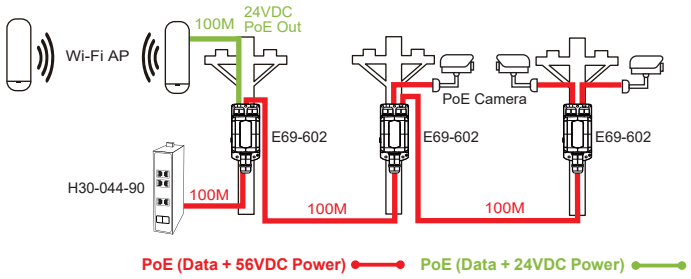

SD Series - Indoor/Outdoor Gigabit 90W/95W PoE Surge Protector

SD-101

Features

- Supports 10M/100M/1G/2.5G bps Ethernet
- Supports 802.3af / 802.3at / 802.3bt / UPoE
- Protects up to 20KV / 10KA surge
- Failure LED indicator
- Operating temperature between -40°C to 85 °C

SD-201

Features

- **Outdoor IP67, IK10, -40°C ~ 85°C**
- Supports 10M/100M/1G/2.5G bps Ethernet
- Supports 802.3af / 802.3at / 802.3bt / UPoE
- Protects up to 20KV / 10KA surge
- Failure LED indicator
- Operating temperature between -40°C to 85 °C

Applications

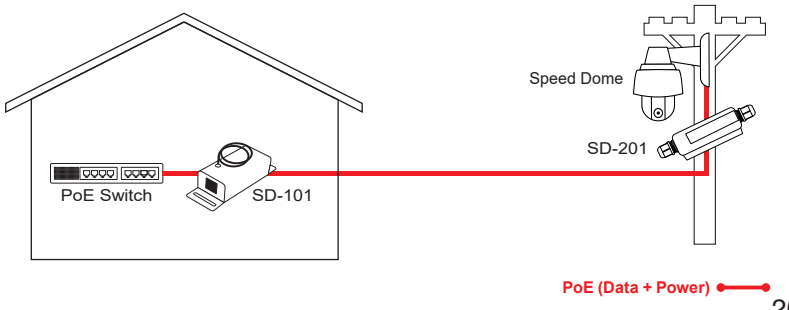

Modular Gigabit PoE Surge Protectors & Related Products Guide

SD Series - Modular Gigabit 90W/95W PoE Surge Protectors

SD-404

Features

- 4-CH PoE Surge Protectors
- Din-rail installation, Slide-in modular design
- Quick swap when Lifetime of single PoE surge module is expired
- Supports 10M/100M/1G/2.5G bps Ethernet
- Supports 802.3af / 802.3at / 802.3bt / UPoE
- Protects eight wires of networking cable including PoE
- Protects up to 20KV / 10KA surge
- Failure LED indicator
- Operating temperature between -40°C to 85 °C

SD-424

Features

- 24-CH PoE Surge Protectors
- 1U,19" Rack Mount, Slide-in modular design
- Quick swap when Lifetime of single PoE surge module is expired
- Supports 10M/100M/1G/2.5G bps Ethernet
- Supports 802.3af / 802.3at / 802.3bt / UPoE
- Protects eight wires of networking cable including PoE
- Protects up to 20KV / 10KA surge
- Failure LED indicator
- Operating temperature between -40°C to 85 °C

Applications

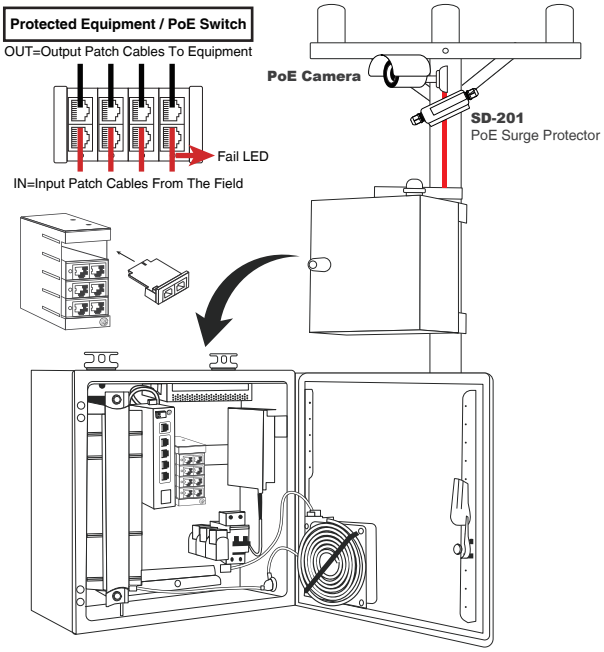

SD Series - IP Managed Modular Gigabit 90W/95W PoE Surge Protectors

SD-504

Features

- Web UI Setup & lifetime detection
- Alarm log event
- 4-CH PoE Surge Protectors
- Slide-in modular design
- Quick swap when lifetime of single PoE surge module is expired
- Supports 10M/100M/1G/2.5G bps Ethernet
- Supports 802.3af / 802.3at / 802.3bt / UPoE
- Protects up to 20KV / 10KA surge
- Failure LED indicator
- Operating temperature between -40°C to 75 °C

SD-524

Features

- Web UI Setup & lifetime detection=
- Alarm log event
- 24-CH PoE Surge Protectors
- Slide-in modular design
- Quick swap when life time of single PoE surge module is expired
- Supports 10M/100M/1G/2.5G bps Ethernet
- Supports 802.3af / 802.3at / 802.3bt / UPoE
- Protects up to 20KV / 10KA surge
- Failure LED indicator
- Operating temperature between -40°C to 75 °C

Applications

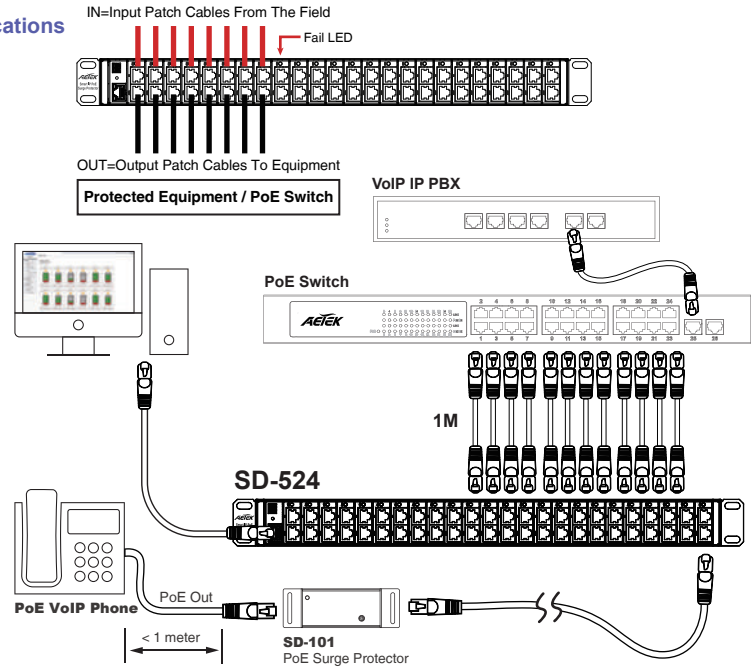

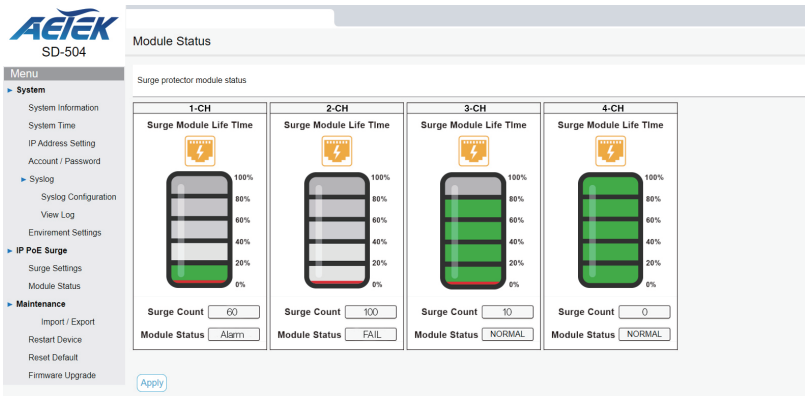

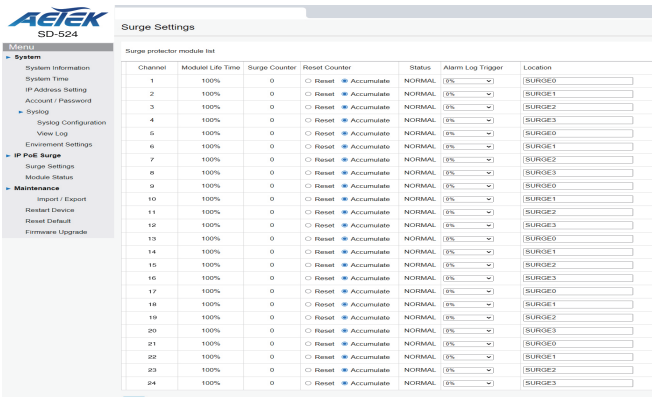

Related Products

SFP Transceiver

SFP-SX-X5	SFP-SX-02	SFP-LX-10	SFP-LX-40	SFP-TX-X1
1.25G Multi-Mode SFP 850nm, 0.5KM, 0°C~70°C	1.25G Multi-Mode SFP, LC 1310nm, 2KM, 0°C ~ 70°C	1.25G Single-Mode SFP, LC 1310nm, 10KM, 0°C ~ 70°C	1.25G Single-Mode SFP, LC 1310nm, 40KM, 0°C ~ 70°C	1000BaseT, SFP to RJ45 100M, 0°C ~ 70°C

Related Products

Industrial SFP Transceiver

SFP-ISX-X5
1.25G Multi-Mode SFP
850nm, 0.5KM, -40°C ~ 85°C

SFP-ISX-02
1.25G Multi-Mode SFP, LC
1310nm, 2KM, -40°C ~ 85°C

SFP-ILX-10
1.25G Single-Mode SFP, LC
1310nm, 10KM, -40°C ~ 85°C

SFP-ILX-40
1.25G Single-Mode SFP, LC
1310nm, 40KM, -40°C ~ 85°C

SFP-ITX-X1
1000BaseT, SFP to RJ45
100M, -40°C ~ 85°C

SFP+ Transceiver

SFPP-SR-X3
10G Multi-Mode SFP+LC
850nm, 0.3KM, 0°C ~ 70°C

SFPP-LR-10
10G Single-Mode SFP+LC
1310nm, 10KM, 0°C ~ 70°C

SFPP-ER-40
10G Single-Mode SFP+LC
1310nm, 40KM, 0°C ~ 70°C

SFPP-ZR-80
10G Single-Mode SFP+LC
1310nm, 80KM, 0°C ~ 70°C

SFPP-TX-X03
10G, SFP+ to RJ45, 30M
0°C ~ 70°C

Industrial SFP+ Transceiver

SFPP-ISR-X3
IND 10G SFP+, MMF,
850NM, 300M

SFPP-ILR-10
IND 10G SFP+, SMF,
1310NM, 10KM

SFPP-IER-40
IND 10G SFP+, SMF,
1550NM, 40KM

BiDi SFP Transceiver

SFP-ALX-02
1.25G SFP,MMF Bi-Di,
TX:1310NM / RX:1550NM,2KM

SFP-BLX-02
1.25G SFP,MMF Bi-Di,
TX:1550NM / RX:1310NM,2KM

BiDi SFP Transceiver

SFP-ALX-20
1.25G SFP,SMF Bi-Di,
TX:1310NM / RX:1550NM,20KM

SFP-BLX-20
1.25G SFP,SMF Bi-Di,
TX:1550NM / RX:1310NM,20KM

SFP-ALX-40
1.25G SFP,SMF Bi-Di,
TX:1310NM / RX:1550NM,20KM

SFP-BLX-40
1.25G SFP,SMF Bi-Di,
TX:1550NM / RX:1310NM,20KM

Industrial BiDi SFP Transceiver

SFP-IALX-02
IND 1.25G SFP,MMF Bi-Di,
TX:1310NM / RX:1550NM,2KM

Industrial BiDi SFP Transceiver

SFP-IBLX-02
IND 1.25G SFP,MMF Bi-Di,
TX:1550NM / RX:1310NM,2KM

SFP-IALX-20
IND 1.25G SFP,SMF Bi-Di,
TX:1310NM / RX:1550NM,20KM

SFP-IBLX-20
IND 1.25G SFP,SMF Bi-Di,
TX:1550NM / RX:1310NM,20KM

SFP-IALX-40
IND 1.25G SFP,SMF Bi-Di,
TX:1310NM / RX:1550NM,40KM

SFP-IBLX-40
IND 1.25G SFP,SMF Bi-Di,
TX:1550NM / RX:1310NM,40KM

BiDi SFP+ Transceiver

SFPP-ALR-02
10G SFP,MMF Bi-Di,
TX:1270NM / RX:1330NM,2KM

SFPP-BLR-02
10G SFP,MMF Bi-Di,
TX:1330NM / RX:1270NM,2KM

SFPP-ALR-20
10G SFP,SMF Bi-Di,
TX:1270NM / RX:1330NM,20KM

SFPP-BLR-20
10G SFP,SMF Bi-Di,
TX:1330NM / RX:1270NM,20KM

SFPP-ALR-40
10G SFP,SMF Bi-Di,
TX:1270NM / RX:1330NM,40KM

BiDi SFP+ Transceiver

SFPP-BLR-40
10G SFP,SMF Bi-Di,
TX:1330NM / RX:1270NM,40KM

Pole Mount

AT-100
Pole Mount Adapter

Corner Mount

AT-101
Pole Mount Adapter

AT-200
Corner Mount Adapter

Junction Box

JB-200
Junction Box

Industrial Power Supply

NDR-75-48
Indoor Industrial Din-Rail Power
Supply, 48~55VDC/75W
-20°C ~ 70°C

NDR-120-48
Indoor Industrial Din-Rail Power
Supply, 48~55VDC/120W
-20°C ~ 70°C

NDR-240-48
Indoor Industrial Din-Rail Power
Supply, 48~55VDC/240W
-20°C ~ 70°C

NDR-480-48
Indoor Industrial Din-Rail Power
Supply, 48~55VDC/480W
-20°C ~ 70°C

MDR-10-12
Indoor Industrial Din-Rail Power
Supply, 12 V AC/DC/10W
-20°C ~ 70°C

Industrial Power Supply

MDR-40-48
Indoor Industrial Din-Rail Power
Supply, 48 V AC/DC/40W
-20°C ~ 70°C

HLG-120H-54
Outdoor Industrial Power Supply
54VDC/120W
-40°C ~ 70°C, IP67

HLG-240H-54
Outdoor Industrial Power Supply
54VDC/240W
-40°C ~ 70°C, IP67

Fiber Panel Adapter

AT-300
Fiber Panel Adapter
For H40-044/082 Series
& H21-082 use.

AT-301
Fiber Panel Adapter
For H80 Series use.

Camera Housing
Product Guide

AI Camera Housing
AC24V(Optional DC24V)
30W/60W/90W PoE
800m PoE
AISI 316L Stainless Steel

Camera Housing Product Selection Guide

			AC24V	30W PoE	90W PoE	EPoC	EPoT
Aluminum IP66 / 68 IK10	Heater & Blower	Unmanaged	A1000 P28	A5000 P28		A5000-E P30	A5000-T P31
	Heater & Blower Fixed IR 50m	Unmanaged	A1020 P28	A5020 P28		A5020-E P30	A5020-T P31
	Heater & Blower VAIR	Unmanaged	P2000-I P27		P6000-I-V2 P27		
		AI	M2000-I P25		M6000-I P26		
	Heater & Blower Temp.-50°C VAIR	Unmanaged	P2000-AI P27				
		AI	M2000-AI P25		M6000-AI P26		
	Heater & Blower Wiper VAIR	Unmanaged	P2000-IW P27		P6000-IW P27		
		AI	M2000-IW P25		M6000-IW P26		
	Heater & Blower VAIR Wiper Temp.-50°C	Unmanaged	P2000-AIW P27		M6000-AIW P26		
		AI	M2000-AIW P25				
	Thermal	Unmanaged	A2100 P28	A5100 P28		A5100-E P28	A5100-T P28
316L Stainless Steel IP66 / IP68 IK10	Heater & Blower	Unmanaged	S1000 P32	S5000 P32		S5000-E P32	S5000-T P32
	Heater & Blower 12W VAIR LED	Unmanaged	S2000-I P32		S6000-I P32	S5000-EI P32	S5000-TI P32
	Heater & Blower 12W VAIR LED Built-in wiper	Unmanaged	S2000-IW P32		S6000-IW P32		
	Thermal	Unmanaged	S2100 P33	S5100 P33		S5100-E P32	S5100-T P32

AI Camera Housing – AC24V input Product Guide

M2000 AI Camera Housing – AC24V input

M2000-I

Features

- IP68 rated, IK10 vandal proof
- Web UI Control
- Window heater & blower
- Adjustable sunshield
- Optional VAIR illuminator
- AC24V input
- Aluminum die casting body

M2000-IW

Features

- **Built-in wiper**
- IP66 rated, IK10 vandal proof
- Web UI Control
- Window heater & blower
- Adjustable sunshield
- Optional VAIR illuminator
- AC24V input
- Aluminum die casting body

M2000-AI

Features

- **Arctic cold start heater at -40°C (operating temperature at -50°C)**
- IP68 rated, IK10 vandal proof
- Web UI Control
- Window heater & blower
- Adjustable sunshield
- Optional VAIR illuminator
- AC24V input
- Aluminum die casting body

M2000-AIW

Features

- **Arctic cold start heater at -40°C (operating temperature at -50°C)**
- **Built-in wiper**
- IP66 rated, IK10 vandal proof
- Web UI Control
- Window heater & blower
- Adjustable sunshield
- Optional VAIR illuminator
- AC24V input
- Aluminum die casting body

AI Camera Housing Managed UI

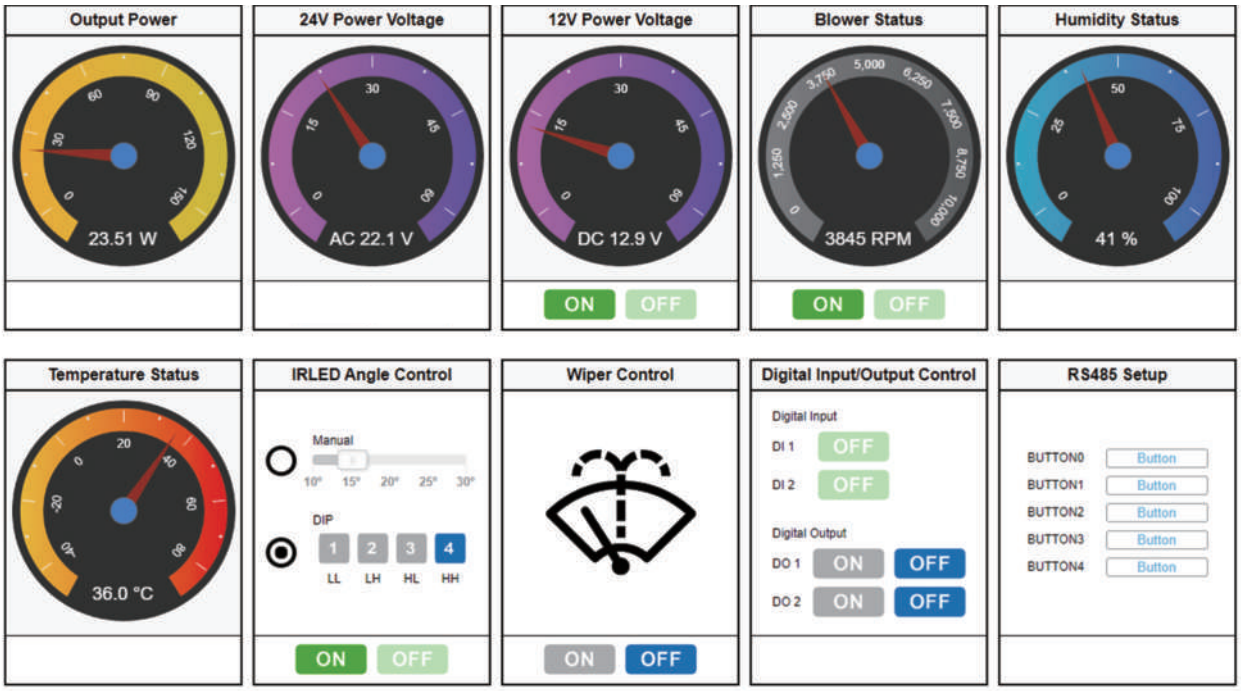

Application

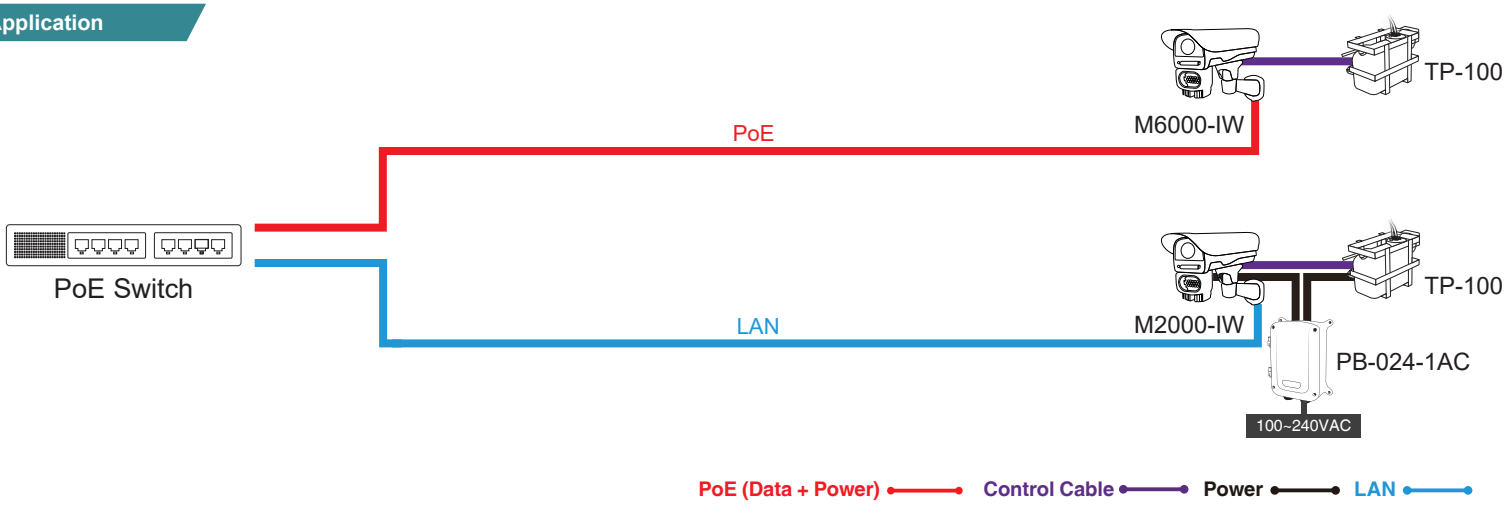

AI Camera Housing – PoE input (90W bt & 95W PoH) Product Guide

M6000 AI Camera Housing – PoE input (90W bt & 95W PoH)

M6000-I

Features
- IP68 rated, IK10 vandal proof
- Web UI Control
- Window heater & blower
- Adjustable sunshield
- 90W bt & 95W PoH PoE input
- Optional VAIR Illuminator
- Aluminum die casting body

M6000-IW

Features
- **Built-in wiper**
- IP66 rated, IK10 vandal proof
- Web UI Control
- Window heater & blower
- Adjustable sunshield
- 90W bt & 95W PoH PoE input
- Optional VAIR Illuminator
- Aluminum die casting body

M6000-AI

Features
- **Arctic cold start heater at -40°C (operating temperature at -50°C)**
- IP68 rated, IK10 vandal proof
- Web UI Control
- Window heater & blower
- Adjustable sunshield
- 90W bt & 95W PoH PoE input
- Aluminum die casting body

M6000-AIW

Features
- **Arctic cold start heater at -40°C (operating temperature at -50°C)**
- **Built-in wiper**
- IP66 rated, IK10 vandal proof
- Web UI Control
- Window heater & blower
- Adjustable sunshield
- 90W bt & 95W PoH PoE input
- Aluminum die casting body

AI Camera Housing Managed UI

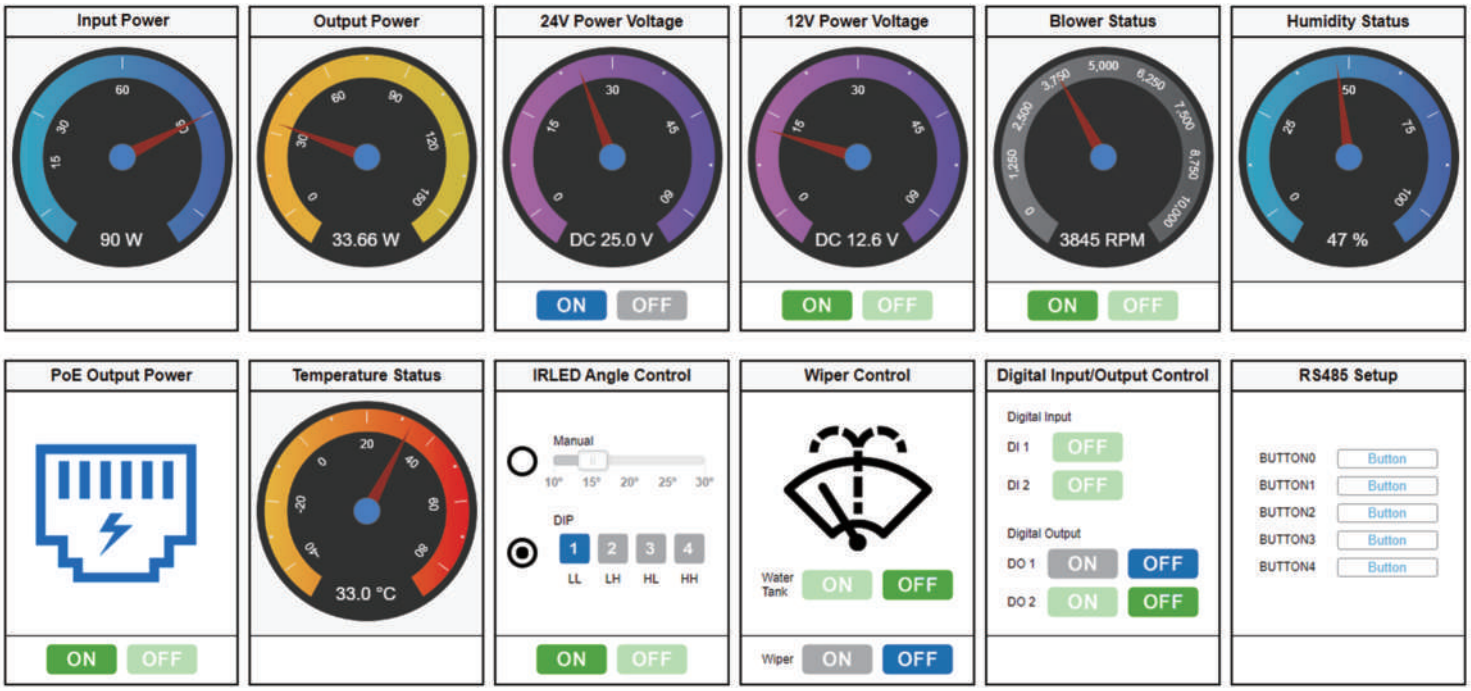

Plug-and-Play quick connection for PoE IP box/brick camera inside smart camera housing

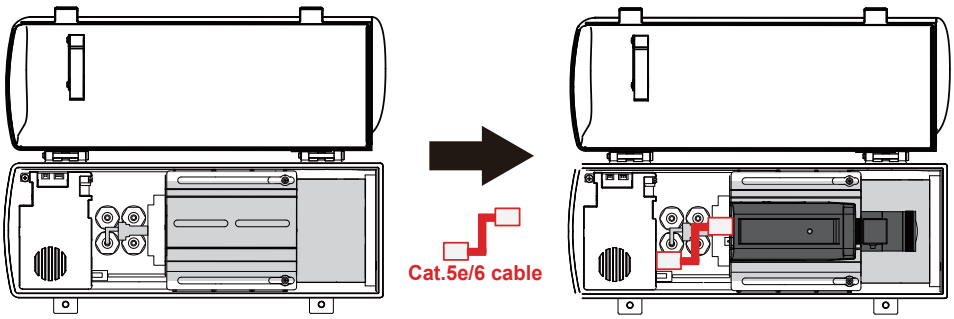

Professional Camera Housing Product Guide

P20 Series - Professional AC24V Camera Housing

P2000-I

Features

- IP68 rated, IK10 vandal proof
- Window heater & blower
- Adjustable sunshield
- Optional VAIR illuminator
- AC24V Input (Optional DC24V)
- Aluminum die casting body

P2000-AI

Features

- **Arctic cold start heater at -40°C (operating temperature at -50°C)**
- IP68 rated, IK10 vandal proof
- Window heater & blower
- Adjustable sunshield
- Optional VAIR illuminator
- AC24V Input (Optional DC24V)
- Aluminum die casting body

P2000-IW

Features

- **Built-in wiper**
- IP66 rated, IK10 vandal proof
- Window heater & blower
- Adjustable sunshield
- Optional VAIR illuminator
- AC24V Input (Optional DC24V)
- Aluminum die casting body

P2000-AIW

Features

- **Arctic cold start heater at -40°C (operating temperature at -50°C)**
- **Built-in wiper**
- IP66 rated, IK10 vandal proof
- Window heater & blower
- Adjustable sunshield
- Optional VAIR illuminator
- AC24V Input (Optional DC24V)
- Aluminum die casting body

P60 Series - Professional 90W PoE Camera Housing

P6000-I-V2

Features

- IP68 rated, IK10 vandal proof
- Window heater & blower
- Adjustable sunshield
- 90W PoE input
- Optional VAIR Illuminator
- Aluminum die casting body

P6000-IW

Features

- **Built-in wiper**
- IP66 rated, IK10 vandal proof
- Window heater & blower
- Adjustable sunshield
- 90W PoE input
- Optional VAIR Illuminator
- Aluminum die casting body

Professional Camera Housing Line

P20 Series	P60 Series
AC24V Input	90W PoE Input
- ITB(Illuminator Touch Board) for optional Vair-IR illuminator - Quick latch & tether wire for safety installation - Side opening alarm interface - Adjustable sunshield	- Spacious dimensions for camera equipped with long varifocal lens - Window heater for demisting & deicing - Blower - Aluminum die casting body
- Optional wiper - Optional cold start heater	- Optional VAIR illuminator - Optional water tank & pump
- I : ITB(Illuminator touch board) - A: Arctic cold start heater at -40°C (operating temperature -50°C)	- W: Wiper

VAIR Illuminator Technology

VAIR technology is an optical technology to adjust illuminator beam angle by remote control thru RS485 Pelco-D command or manual dip switch to suit camera FOV

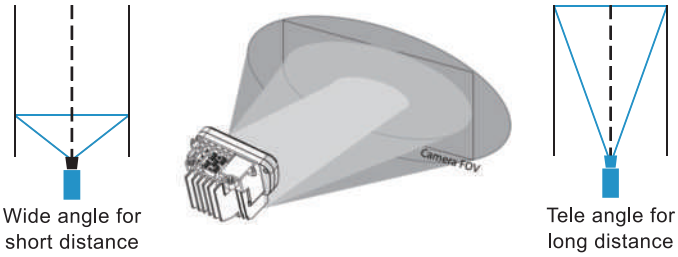

Without exposing power cable & RS485 wire for illuminator

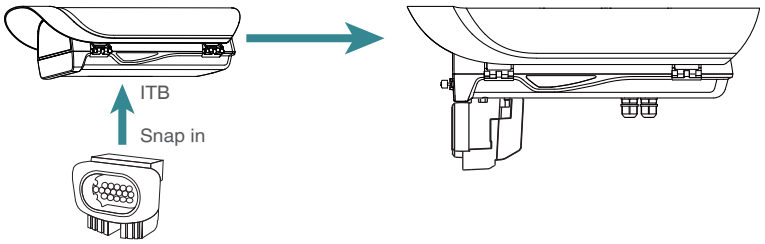

Safety tether wire & Quick latch for safety installation

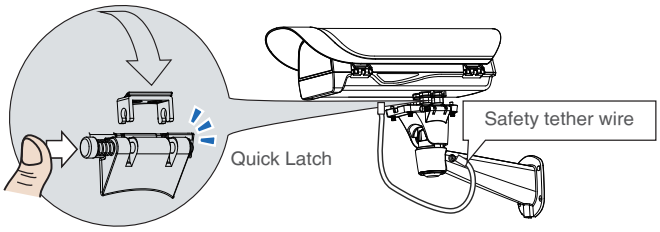

VR-120	VR-241	VR-481
Snap-in 12W IR LEDs	Snap-in 24W IR LEDs	Snap-in 48W IR LEDs

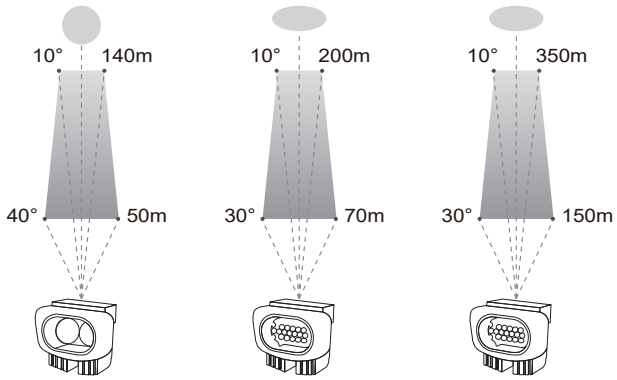

Affordable / Thermal / ANPR Camera Housing Product Guide

A10 Series - Affordable Camera Housing

A1000

Features

- IP68 rated, IK10 vandal proof
- Window heater & blower
- Adjustable sunshield
- AC24V/DC24V input
- Aluminum die casting body

A1020

Features

- **6W Fixed IR viewing up to 50m**
- IP66 rated, IK10 vandal proof
- Window heater & blower
- Adjustable sunshield
- AC24V/DC24V input
- Aluminum die casting body

A50 Series - Affordable PoE Camera Housing

A5000

Features

- IP68 rated, IK10 vandal proof
- Window heater & blower
- Adjustable sunshield
- 30W PoE input
- Aluminum die casting body

A5020

Features

- **6W Fixed IR viewing up to 50m**
- IP66 rated, IK10 vandal proof
- Window heater & blower
- Adjustable sunshield
- 30W PoE input
- Aluminum die casting body

A21 Series - Thermal Camera Housing Line

A2100

Features

- AC24V/DC24V input
- **Germanium window**
- Blower
- IP68/IK10
- Aluminum die casting body

A51 Series - Thermal PoE Camera Housing Line

A5100

Features

- 30W PoE input
- **Germanium window**
- Blower
- IP68/IK10
- Aluminum die casting body

P29_P69 Series - ANPR Camera Housing

P2900-IW Kit A

Features

- **Catch speed up to 100km/h**
- IP66 rated, IK10 vandal proof
- AC24V input
- Built-in wiper
- 48W VAIR Illuminator
- Aluminum die casting body

P6900-IW Kit A

Features

- **Catch speed up to 100km/h**
- IP66 rated, IK10 vandal proof
- 90W PoE input
- Built-in wiper
- 48W VAIR Illuminator
- Aluminum die casting body

P29 Kit A/B Series - ANPR Camera Housing

P2915 Kit A/B

Features

- **Catch speed up to 150km/h**
- IP68 rated, IK10 vandal proof
- 80W External VAIR Illuminator
- AC24V input
- Aluminum die casting body

P2925 Kit A/B

Features

- **Catch speed up to 250km/h**
- IP68 rated, IK10 vandal proof
- 288W pulse mode external VAIR Illuminator
- DC24V input
- Aluminum die casting body

Dimensions

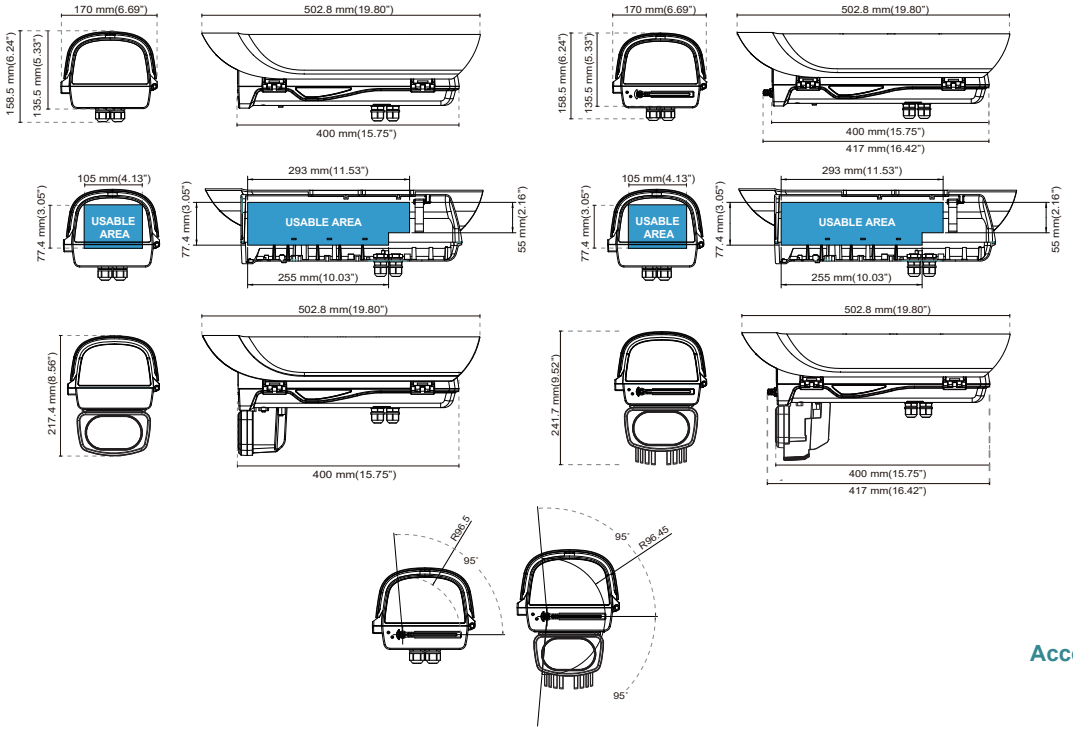

Accommodate with AXIS Q1635 + 8-80mm vari-focal lens

Accommodate with Avigilon H4A/H5A box & H4 Pro box equipped with long range van-focal lens

Related Product Guide for Camera Housing Line

Brackets

Wall Mount		Ceiling Mount		Standing Mount
BK-101 Wall Mount Bracket Safety Wire Concealing Cable	BK-102 Wall Mount Bracket Concealing Cable	BK-200 J-type Ceiling Mount Bracket	BK-201 Flexible J-type Ceiling Mount Bracket	BK-300 Standing Mount Bracket

Adapters

Pole Mount		Corner Mount	Fit
AT-100 Pole Mount Adapter	AT-101 Pole Mount Adapter	AT-200 Corner Mount Adapter	BK-101 BK-102

Junction Box

Wall Mount	Fit
JB-100 Junction Box	BK-101 BK-102 AT-100 AT-101 AT-200

VAIR LEDs

VAIR LEDs (For -I model)			
	VR-120 • Snap Vair 10~40° IR LED, 12W		VR-241 • Snap Vair 10~30° IR LED, 24W VR-481 • Snap Vair 10~30° IR LED, 48W

Water Tank & Pump

Water Tank & Pump (For -W model)	
	TP-100 • 10L Water Tank & Pump

Power Boxes

Model Name	A10 Series	P20 Series	P29 Series	M20 Series
PB-024-1AC				
PB-024-2AC				

PoE Switches

Model Name	A50 Series	P60 Series	P69 Series	M60 Series
30W PoE Switch		–	–	–
90W PoE Switch	–			

800m PoE Camera Housing over Coax Product Guide

800m PoE Camera Housing over Coaxial Cable

A5000-E

Features

- IP68 rated, IK10 vandal proof
- Window heater & blower
- EPoC Input
- 6KV surge protector
- Aluminum die casting body

A5020-E

Features

- **6W Fixed IR viewing up to 50m**
- IP66 rated, IK10 vandal proof
- EPoC Input
- 6KV surge protector
- Aluminum die casting body

A5100-E

Features

- **Germanium window**
- IP68 rated, IK10 vandal proof
- EPoC Input
- 6KV surge protector
- Aluminum die casting body

Applications

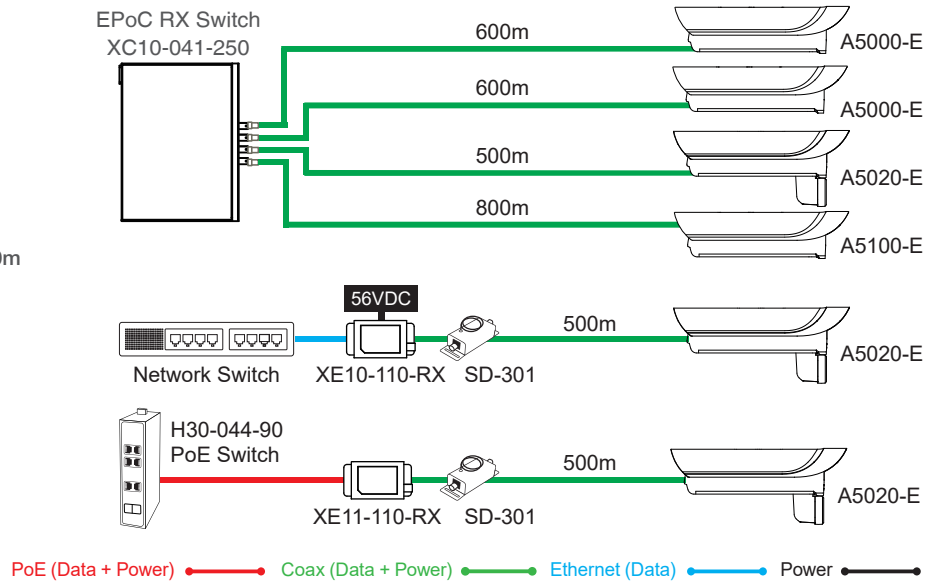

Related Products

EPoC RX Adapter Series

XE10-110-RX

- XE10-110-RX EPoC adapter (RX)
- 65W@56VDC power adapter

XE11-110-RX

- XE11-110-RX PoE EPoC adapter (RX)
- Supports 30W/60W/90W PoE Input

EPoC RX Switch

XC10-041-250

- 4xBNC coaxial ports, 1xGigabit LAN port
- Playing RX mode
- 6KV surge protection for each EPoC port
- 250W Power Supply, 100~240VAC input

XC10-084-380

- 8xBNC coaxial ports & 4xGigabit LAN port
- Playing RX mode
- 6KV surge protection for each EPoC port
- 380W Power Supply, 100~240VAC input

XC10-164-750

- 16xBNC coaxial ports & 4xGigabit LAN port
- Playing RX mode
- 6KV surge protection for each EPoC port
- 750W Power Supply, 100~240VAC input

EPoC Related Product

CH-100-V2

- 19", 1U 4-bay Rack Mount Chassis
- For 4 sets of XE10-110-RX & 65W power adapter

H30-044-90

- 60W/95W PoE Switch
- Works with XE11-110-RX

SD-301

- BNC Surge Protector
- 6KV Surge Protection

BNC-Y

- Y-Type BNC Adapter

CH-110-V2

- 19", 1U 8-bay rack mount chassis
- For 8 pieces of XE11-110-RX

I39-200

- 95W PoE Injector
- Works with XE11-110-RX

BNC-T

- T-Type BNC Adapter

BNC-YC

- Outdoor Y-Type BNC Cable

Brackets

Wall Mount

BK-101
Wall Mount Bracket
Safety Wire
Concealing Cable

BK-102
Wall Mount Bracket
Concealing Cable

Ceiling Mount

BK-200
J-type
Ceiling Mount
Bracket

BK-201
Flexible J-type
Ceiling Mount
Bracket

Standing Mount

BK-300
Standing Mount
Bracket

Adapters

Pole Mount		Corner Mount	Fit
AT-100 Pole Mount Adapter	AT-101 Pole Mount Adapter	AT-200 Corner Mount Adapter	BK-101
			BK-102

Junction Box

Wall Mount	Fit
JB-100 Junction Box	BK-101
	BK-102
	AT-100
	AT-101
	AT-200

800m PoE Camera Housing over UTP/STP Product Guide

800m PoE Camera Housing over Cat.5e / Cat.6 Cable

A5000-T

Features
- IP68 rated, IK10 vandal proof
- Window heater & blower
- EPoT Input
- 6KV surge protector
- Aluminum die casting body

A5020-T

Features
- **6W Fixed VAIR viewing up to 50m**
- IP66 rated, IK10 vandal proof
- EPoT Input
- 6KV surge protector
- Aluminum die casting body

A5100-T

Features
- **Germanium window**
- IP68 rated, IK10 vandal proof
- EPoT Input
- 6KV surge protector
- Aluminum die casting body

Applications

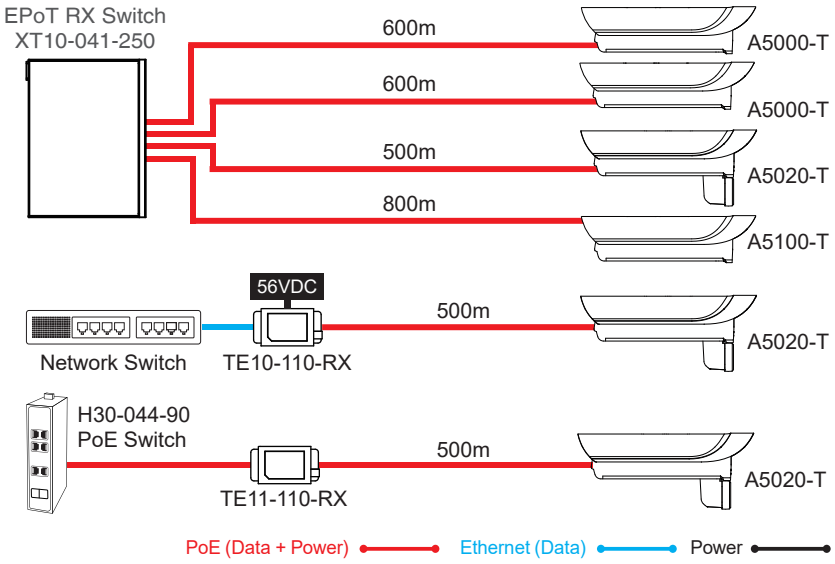

Related Products

EPoT RX Adapter Series

TE10-110-RX
- TE10-110-RX EPoT adapter (RX)
- 65W @56VDC power adapter

TE11-110-RX
- TE11-110-RX PoE EPoT adapter (RX)
- Supports 30W/60W/90W PoE Input

EPoT RX Switch

XT10-041-250
- 4xEPoT RJ45 ports & 1xGigabit LAN port
- Playing RX mode
- 6KV Surge Protection for each EPoT RJ45 port
- 250W Power Supply, 100~240VAC input

EPoT Related Product

H30-044-90
- 60W/95W PoE Switch
- Works with TE11-110-RX

I39-200
- 95W PoE Injector
- Works with TE11-110-RX

UTP-YC cable
- Outdoor Y type RJ45 Cable

CH-100-V2
- 19”, 1U 4-bay rack mount chassis
- For 4 sets of TE10-110-RX & 65W power adapter

CH-110-V2
- 19”, 1U 8-bay rack mount chassis
- For 8 pieces of TE11-110-RX

Brackets

Wall Mount		Ceiling Mount		Standing Mount
BK-101 Wall Mount Bracket Safety Wire Concealing Cable	BK-102 Wall Mount Bracket Concealing Cable	BK-200 J-type Ceiling Mount Bracket	BK-201 Flexible J-type Ceiling Mount Bracket	BK-300 Standing Mount Bracket

Adapters

Pole Mount		Corner Mount	Fit
AT-100 Pole Mount Adapter	AT-101 Pole Mount Adapter	AT-200 Corner Mount Adapter	BK-101 BK-102

Junction Box

Wall Mount	Fit
JB-100 Junction Box	BK-101 BK-102 AT-100 AT-101 AT-200

AISI 316L Stainless Steel Camera Housing Product Guide

AC24V Camera Housing

S1000

Features
- IP68 rated, IK10 vandal proof
- AC24V/DC24V input
- Window heater & blower
- Adjustable sunshield
- AISI 316L stainless steel construction
- Fits corrosive & severe environments

S2000-I

Features
- **12W VAIR LED**
- IP66 rated, IK10 vandal proof
- AC24V Input
- Window heater & blower
- Adjustable sunshield
- AISI 316L stainless steel construction
- Fits corrosive & severe environments

S2000-IW

Features
- **12W VAIR LED**
- **Built-in wiper**
- IP66 rated, IK10 vandal proof
- AC24V Input
- Window heater & blower
- Adjustable sunshield
- AISI 316L stainless steel construction
- Fits corrosive & severe environments

PoE Camera Housing

S5000

Features
- 30W PoE Input
- IP68 rated, IK10 vandal proof
- Window heater & blower
- Adjustable sunshield
- AISI 316L stainless steel construction
- Fits corrosive & severe environments

S6000-I

Features
- 90W PoE input
- **12W VAIR LED**
- IP66 rated, IK10 vandal proof
- Window heater & blower
- Adjustable sunshield
- AISI 316L stainless steel construction
- Fits corrosive & severe environments

S6000-IW

Features
- 90W PoE input
- **12W VAIR LED**
- **Built-in wiper**
- IP66 rated, IK10 vandal proof
- Window heater & blower
- Adjustable sunshield
- AISI 316L stainless steel construction
- Fits corrosive & severe environments

600m PoE over Coaxial Cable Camera Housing

S5000-E

Features
- IP68 rated, IK10 vandal proof
- Window heater & blower
- Adjustable sunshield
- EPoC Input
- AISI 316L stainless steel construction
- Fits corrosive & severe environments

S5000-EI

Features
- **12W VAIR LED**
- IP66 rated, IK10 vandal proof
- Window heater & blower
- Adjustable sunshield
- EPoC Input
- AISI 316L stainless steel construction
- Fits corrosive & severe environments

S5100-E

Features
- **Germanium window**
- IP68 rated, IK10 vandal proof
- Blower
- Adjustable sunshield
- EPoC Input
- AISI 316L stainless steel construction
- Fits corrosive & severe environments

600m PoE over UTP/STP Cable Camera Housing

S5000-T

Features
- IP68 rated, IK10 vandal proof
- Window heater & blower
- Adjustable sunshield
- EPoT Input
- AISI 316L stainless steel construction
- Fits corrosive & severe environments

S5000-TI

Features
- **12W VAIR LED**
- IP66 rated, IK10 vandal proof
- Window heater & blower
- Adjustable sunshield
- EPoT Input
- AISI 316L stainless steel construction
- Fits corrosive & severe environments

S5100-T

Features
- **Germanium window**
- IP68 rated, IK10 vandal proof
- Blower
- Adjustable sunshield
- EPoT Input
- AISI 316L stainless steel construction
- Fits corrosive & severe environments

AISI 316L Stainless Steel Camera Housing Product Guide

Thermal Camera Housing Line

S2100

Features

- **Germanium window**
- IP68 rated, IK10 vandal proof
- AC24V/DC24V input
- Blower
- Adjustable sunshield
- AISI 316L stainless steel construction
- Fits corrosive & severe environments

S5100

Features

- **Germanium window**
- IP68 rated, IK10 vandal proof
- 30W PoE Input
- Blower
- Adjustable sunshield
- AISI 316L stainless steel construction
- Fits corrosive & severe environments

VAIR Illuminator Technology

VAIR technology is an optical technology to adjust illuminator beam angle by remote control thru RS485 Pelco-D command or manual dip switch to suit camera FOV

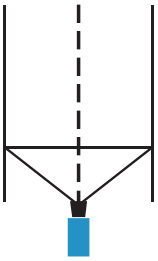

Wide angle for short distance

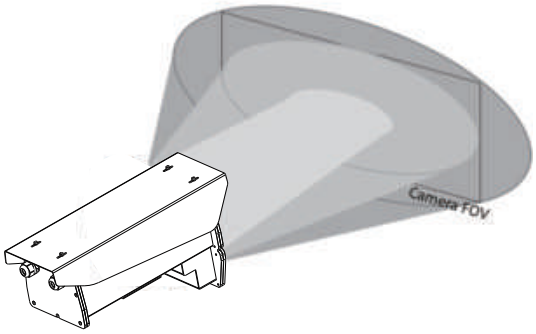

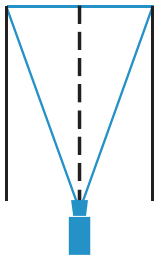

Tele angle for long distance

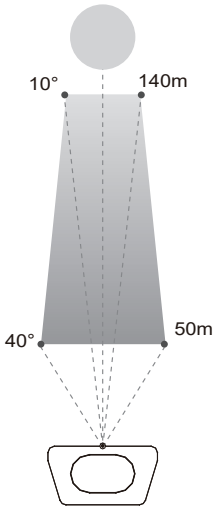

AISI 316L Stainless Steel Dimensions

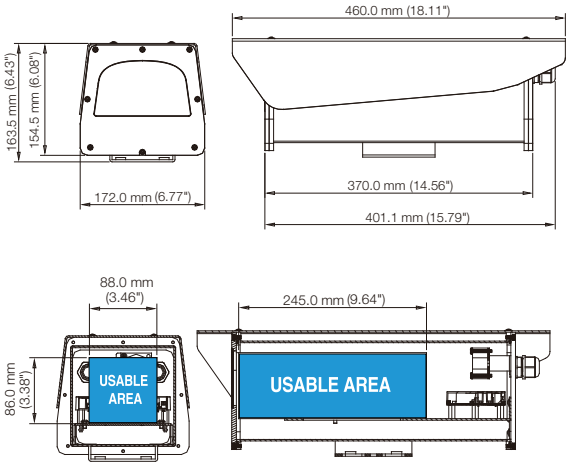

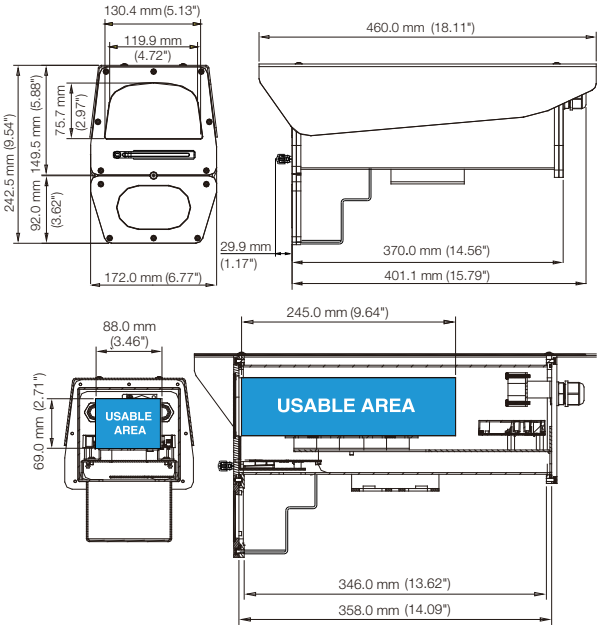

Related Product

Wall Mount Bracket

BK-103
AISI 316L Stainless Steel
Wall Mount Bracket

Water Tank & Pump (For -W model)

TP-100
Stainless Steel
10L Water Tank & Pump

Pole Mount

AT-102
AISI 316L Stainless steel
Pole Mount Adapter

A LEADING PoE SOLUTION FOR IP SURVEILLANCE

1. **Using all-in-one technology** to make outdoor IP connections easy, fast and cost-effective.

AETEK products are **distributed to over 50 countries world-wide**, they are reliable and versatile, AETEK solutions are preferred by system integrators.

Our 1st priority is to **bring innovative but practical products to our customers**, we will continue to roll-out useful PoE solutions for real-world IP and PoE related applications to our partners.

AETEK INC.
3F, No.192, Lien-Cheng Rd., Chung-Ho, New Taipei City, 235, Taiwan, R.O.C.
sales@aetektec.com www.aetektec.com

AETEK INC. Specifications are subject to change without notice. AETEK is registered trademark of AETEK INC. and its overseas subsidiaries. All other trademarks belong to their respective owners.

Copyright © AETEK INC. All rights reserved. 2021 Ver.1